Aruba 5000™

WLAN Switch with AirOS 2.1 Software

FIPS 140-2 Level 2 Release Supplement

Version 02

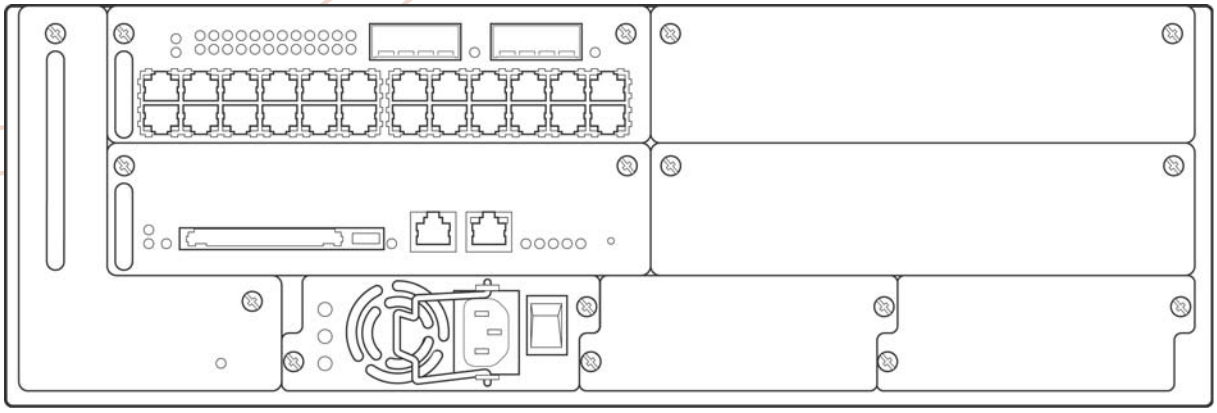

ARUBA
WIRELESS NETWORKS

1322 Crossman Avenue
Sunnyvale, California 94089

www.arubanetworks.com
Tel 408.227.4500
Fax408.227.4550

Copyright

Copyright © 2004 Aruba Wireless Networks, Inc. All rights reserved.

Specifications in this manual are subject to change without notice.

Originated in the USA.

Trademarks

AirOS, Aruba 5000, and Aruba 52 are trademarks of Aruba Wireless Networks, Inc. in the United States and certain other countries.

Any other trademarks appearing in this manual are the property of their respective companies.

Contents

Preface v

Purpose of this Document v
Related Documents vi
Product Manuals vi
Additional Product Information vi
Text Conventions vii
Contacting Aruba Wireless Networks viii

Chapter 1 **The Aruba 5000 WLAN Switch** 1

Overview 1
Physical Description 3
Dimensions 3
Cryptographic Module Boundaries 3
Modular Chassis 4
Switch Interfaces 5
Line Card Interfaces 5
Supervisor Card Interfaces 5
Power Supply Interfaces 6
Configuration Table 6
Indicator LEDs 7

Chapter 2 **FIPS 140-2 Level 2 Features** 11

Intended Level of Security 11
Physical Security 12
Operational Environment 12
Logical Interfaces 12

Roles and Services 14
Crypto Officer Role 14
User Role 18
Authentication Mechanisms 19
Unauthenticated Services 19
Cryptographic Key Management 20
Implemented Algorithms 20
Critical Security Parameters 21
Encryption Keys and Passwords 23
Self-Tests 25
Mitigation of Other Attacks 26

Chapter 3 **Installing the Switch** 27

Pre-Installation Checklist 28
Precautions 29
The Security Kit 30
Product Examination 30
Package Contents 30
Minimum Switch Configuration 30
Additional Modules 32
Selecting a Location 33
Rack Mounting Kit 34
Mounting the Chassis 35
Connecting Power 37
Tamper-Evident Labels 41
Reading TELs 41
Required TEL Locations 42
Applying TELs 44

Chapter 4 **Ongoing Management** 45

Crypto Officer Management 45
User Guidance 46

Chapter 5 **Setup & Configuration** 47

Connecting to the Switch 47
Logging in with the CLI 48
Privileged Mode 48
Enabling FIPS Mode 49
FIPS Commands 49
Logging in with the GUI 51

Appendix A **Acronyms** 53

Preface

This security policy document can be copied and distributed freely.

Purpose of this Document

This release supplement provides information regarding the Aruba 5000 WLAN Switch with FIPS 140-2 Level 2 validation from Aruba Wireless Networks. The material in this supplement modifies the general Aruba 5000 WLAN Switch hardware and software documentation included with this product and should be kept with your Aruba product documentation.

This supplement primarily covers the non-proprietary Cryptographic Module Security Policy for the Aruba 5000 WLAN Switch. This security policy describes how the switch meets the security requirements of FIPS 140-2 Level 2 and how to place and maintain the switch in a secure FIPS 140-2 mode. This policy was prepared as part of the FIPS 140-2 Level 2 validation of the product (Certificate #491).

FIPS 140-2 (Federal Information Processing Standards Publication 140-2, *Security Requirements for Cryptographic Modules*) details the U.S. Government requirements for cryptographic modules. More information about the FIPS 140-2 standard and validation program is available on the National Institute of Standards and Technology (NIST) Web-site at:

http://csrc.nist.gov/cryptval

Related Documents

Product Manuals

The following items are part of the complete installation and operations documentation included with this product:

- *Aruba 5000 WLAN Switch FIPS Release Supplement (this document)*
- *Aruba 5000 WLAN Switch Installation Guide*
- *Aruba AirOS 2.0 User's Guide*
- *Aruba AP Installation Guide*

Additional Product Information

More information is available from the following sources:

- The Aruba Wireless Networks Web-site contains information on the full line of products from Aruba Networks:

  http://www.arubanetworks.com

- The NIST Validated Modules Web-site contains contact information for answers to technical or sales-related questions for the product:

  http://csrc.ncsl.nist.gov/cryptval

Text Conventions

The following conventions are used throughout this manual to emphasize important concepts:

TABLE 1 Text Conventions

Type Style	Description
Italics	This style is used to emphasize important terms and to mark the titles of books.
`System items`	This fixed-width font depicts the following: • Sample screen output • System prompts • Filenames, software devices, and certain commands when mentioned in the text.
`Commands`	In the command examples, this bold font depicts text that the User must type exactly as shown.
<Arguments>	In the command examples, italicized text within angle brackets represents items that the User should replace with information appropriate to their specific situation. For example: # **`send`** *<text message>* In this example, the User would type "send" at the system prompt exactly as shown, followed by the text of the message they wish to send. Do not type the angle brackets.
[Optional]	In the command examples, items enclosed in brackets are optional. Do not type the brackets.
{ Item A | Item B }	In the command examples, items within curled braces and separated by a vertical bar represent the available choices. Enter only one choice. Do not type the braces or bars.

Contacting Aruba Wireless Networks

Web Site

- Main Site http://www.arubanetworks.com
- Support http://www.arubanetworks.com/support

E-mail

- Sales sales@arubanetworks.com
- Support support@arubanetworks.com

Telephone Numbers

- Main 408-227-4500
- Fax 408-227-4550
- Sales 408-754-1201
- Support In the U.S.: 800-WI-FI-LAN (800-943-4526)
  International: 408-754-1200

CHAPTER 1

The Aruba 5000 WLAN Switch

This chapter introduces the Aruba 5000 WLAN Switch with FIPS 140-2 Level 2 validation (Certificate #491). It describes the purpose of the switch, its physical attributes, and its interfaces.

Overview

Aruba Wireless Networks' has developed a purpose-built Wireless LAN voice and data switching solution designed to specifically address the needs of large-scale WiFi network deployments for Government agencies and global enterprises. Aruba's WLAN switching solution provides advanced security and management of the corporate RF environment and enforces User security and service policies to both wired and wireless Users.

The Aruba Wireless FIPS 140-2 Level 2 validated WLAN switching platform serves value-add high speed data and QoS assured voice services to thousands of mobile wireless Users simultaneously from a single, cost effective, redundant and scalable solution that performs centralized functionality for:

- Uncompromised User security, authentication and encryption
- Stateful LAN-speed firewalling
- VPN termination
- Wireless intrusion detection, prevention and rogue containment
- RF Air monitoring
- Powerful packet processing switching
- Mobility management

- Advanced RF management
- Advanced User and network service / element management

The Aruba FIPS 140-2 Level 2 validated WLAN switching solution is a highly available, modular and upgradeable switching platform which connects, controls, secures, and intelligently integrates wireless Access Points and Air Monitors into the wired LAN, serving as a gateway between a wireless network and the wired network. The wireless network traffic from the APs is securely tunneled over a L2/L3 network and is terminated centrally on the switch via 10/100/1000 Ethernet physical interfaces where it is authenticated, assigned the appropriate security policies and VLAN assignments and up-linked onto the wired network.

The Aruba WLAN switching solution consists of the three major components:

- Aruba WLAN Switch. This is an enterprise-class switch into which multiple Access Points (APs) and Air Monitors (AMs) may be directly or in-directly (tunneled over a L2/L3 network) connected and controlled.
- Aruba Wireless Access Point. This is a next-generation wireless transceiver which functions as an AP or AM. Although third-party APs can be used with the Aruba WLAN system, the Aruba AP provides the most comprehensive features and simpler integration.
- Aruba AirOS Switch Software. This software intelligently integrates the WLAN switch and APs to provide load balancing, rate limiting, self healing, authentication, mobility, security, firewalls, encryption, and centralization for monitoring and upgrades.

Physical Description

See product on page 30 for a list of what ships with this product.

Dimensions

The Aruba 5000 WLAN Switch has the following physical dimensions:

- 3 RU chassis is designed to fit in a standard 19" rack. A separate mounting kit is needed for a 23" rack.
- Size:
  - Width 17.4" (19" rack width)
  - Height 5.25" (3 RU)—3.5" for the card slots plus 1 RU for the power supply slots
  - Depth 14"
- Maximum weight: Up to 26.5 kg (58 lbs.)

Cryptographic Module Boundaries

For FIPS 140-2 Level 2 validation, the Aruba 5000 WLAN Switch has been validated as a multi-processor standalone cryptographic module. The 19" rack-mountable steel chassis physically encloses the complete set of hardware and software components and represents the cryptographic boundary of the switch. The cryptographic boundary is defined as encompassing the top, front, left, right, rear, and bottom surfaces of the case.

Modular Chassis

The Aruba 5000 WLAN Switch chassis is designed to be modular. All of the modular components, consisting of the switching supervisor and network line cards, the fan tray, and the power supplies, are accessible from the front of the chassis and are field replaceable and hot-swappable.

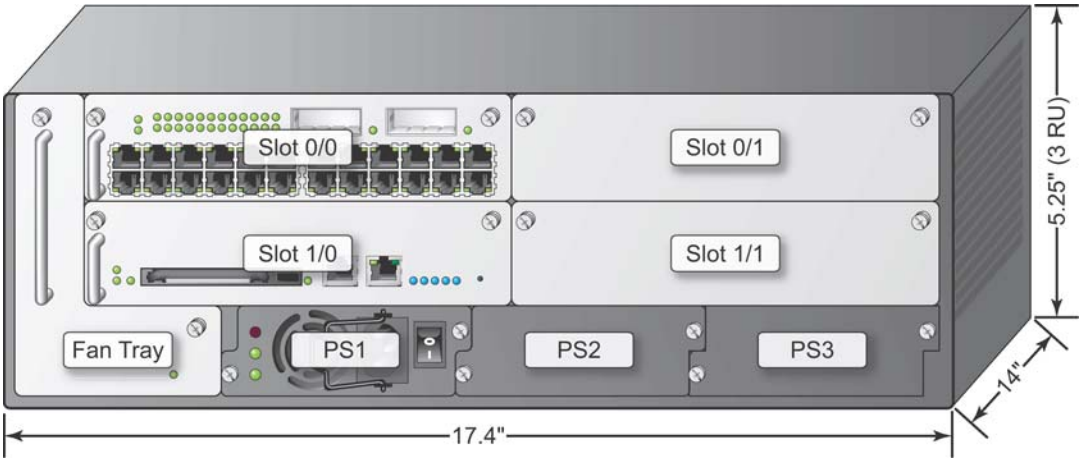

FIGURE 1-1 The Aruba 5000 WLAN Switch Chassis

Figure 1-1 shows the front panel of the Aruba 5000 WLAN Switch, and illustrates the following:

- Slot 0/0 is for the required Line Card (LC) that provides network ports for connecting wireless Access Points, as well as wired LAN segments.
- Slots 0/1 and 1/1 are for optional LC modules to provide extra port capacity.
- Slot 1/0 is for the Supervisor Card (SC). The SC processes all traffic from the LCs, performs cryptographic functions, and controls all management features.
- The hot-swappable fan tray cools the switch. The fan tray pulls air from right to left, as viewed from the front of the chassis, across the installed cards.
- PS1, PS2, and PS3 are for Power Supply modules. The number of power supplies required for the system depends on the number and type of LCs installed, and whether to include redundancy for fault tolerance.

Switch Interfaces

The interfaces for the various switch modules are located at the front panel of the switch (see Figure 1-1 on page 4).

Line Card Interfaces

The LC contains the following interfaces:

- 24 FE ports on the standard Aruba 5000 WLAN Switch Line Card (LC-5000-24FE-2GE (3300007 Rev. 01))

  FE ports are used to connect Access Points and Wired LAN segments to the switch. These ports provide 10/100 Mbps Ethernet connectivity.

  These FE ports accept 4- or 8-conductor Category 5 UTP Ethernet cables with an RJ-45 male connector and automatically adjust for straight-through or crossover cables.

- 24 FE + SPOE ports on the optional SPOE Line Card (LC-5000-24FE-2GE-SPOE (3300001 Rev. 03))

  When connected directly to an IEEE 802.3af POE compatible device, the port provides 10/100 Mbps Ethernet connectivity, as well as operational power through same cable.

  When using SPOE, an 8-conductor straight-through Category 5 UTP Ethernet cable with an RJ-45 male connector is required.

- 2 Gigabit Ethernet (GE) ports

  The GE port provides high-bandwidth uplinks between the Aruba 5000 WLAN Switch and the wired LAN. The GE socket accepts a variety of Gigabit Interface Converters for versatility in selecting optical and electrical interfaces.

Supervisor Card Interfaces

The SC contains the following interfaces:

- One 10/100 Mbps Ethernet (FE) management port

  This port provides access to the Command Line Interface (CLI) and a Web Interface for complete system management and troubleshooting; or for connecting a separate management network.

  The port accepts a 4- or 8- conductor Category 5 UTP Ethernet cable with an RJ-45 male connector and automatically adjusts for straight-through or crossover cables.

- Recessed reset used to reset the switch if necessary.

NOTE—The SC also includes a PCMCIA drive and serial port, but these interfaces are disabled in FIPS mode.

Power Supply Interfaces

The Aruba 5000 WLAN Switch supports up to three independent, load balancing, and redundant power supplies. Each power supply has its own independent toggle-switch to control the power.

Configuration Table

The supported configurations for the Aruba 5000 WLAN Switch operating in FIPS mode are listed below. (Shaded cells indicate SPOE configurations.)

TABLE 1-1 Supported Configurations

Aruba Part Number/Configuration	Chassis HW-5000-CHASF (3300012 Rev. 02)	Fan Tray HW-5000-FTF (3400016 Rev. 01)	Power Supply HW-5000-PSU-200 (2500009 Rev. 02)	Power Supply HW-5000-PSU-400 (2500016 Rev. 09)	Modules		
					Supervisor Card SC-5000-C2 (3300009 Rev. 02)	Line Card Non- SPOE LC-5000-24FE-2GE (3300007 Rev. 01)	Line Card SPOE LC-5000-24FE- 2GE-SPOE (3300001 Rev. 03)
Configuration A	1	1	2	—	1	1	—
Configuration B	1	1	2	—	1	2	—
Configuration C	1	1	—	2	1	—	1
Configuration D	1	1	—	2	1	—	2

A total of four Aruba 5000 switch configurations are included in the validation, offering non-redundant and redundant platforms that support both non-SPOE and SPOE applications for WLAN voice and data services.

Indicator LEDs

The Aruba 5000 WLAN Switch modules contain a number of LEDs to indicate physical status conditions. A description of the various LEDs is given in the following tables.

Line Card LEDs

TABLE 1-2 Line Card LED Definitions

LED	Color & State		Set by	Significance
Power		Solid Green	HW	Normal—Card has power
		Off	HW	No power
Status		Solid Green	SW	Normal—Card is OK
		Solid Yellow	Reset	Normal during reset—Card being initialized by software
		Solid Red	SW	Not normal—Card has failed
		Off	SW	No power or FPGA initializing
FE Lnk/Act		Solid Green	HW	Normal—FE link is established
		Blink Green	HW	Normal—FE activity
		Solid Yellow	SW	Not normal—Failures on the link
		Off	SW	No link or no power
POE		Solid Green	SW	Normal—Power over Ethernet (POE) is being delivered
		Solid Yellow	SW	Not normal—POE was requested but denied
		Off	SW	POE was not requested and is not being provided, or no power
AP Status		Solid Green	SW	Normal— The AP is OK.
		Blink Green	SW	Normal—Shows AP activity, can do blink with a HW counter
		Solid Yellow	SW	Not normal— There is an AP error
		Solid Red	SW	Not normal—AP is not OK
		Off	SW	No power

TABLE 1-2 Line Card LED Definitions (Continued)

LED	Color & State		Set by	Significance
GE Lnk/Act		Solid Green	SW	Normal—GE link is established
		Blink Green	HW	Normal—Indicates GE activity
		Solid Yellow	SW	Not normal—There are failures on the link
		Off	SW	No link or no power

Supervisor Card LEDs

TABLE 1-3 Supervisor Card LED Definitions

LED	Color & State		Set By	Significance
Power		Solid Green	HW	Normal—Card has power
		Off	HW	No power
Status		Solid Green	SW	Normal—Card is OK
		Solid Yellow	SW	Normal—Card is booting
		Solid Red	SW	Not normal—Card failure
		Off	SW	No power
Active/ Standby		Solid Green	SW	Normal—Active SC
		Solid Yellow	SW	Normal—Standby SC
		Off	SW	No power
Utilization		Green (solid & blinking)	SW	Five LEDs in a row indicate processing activity. Each LED indicates an additional 20% activity level has been reached. The right-most lit LED should blink.
		Off	SW	No power
PCMCIA		Solid Green	HW	Normal—Indicates PCMCIA card is being accessed
		Off	HW	No activity or no power
FE Lnk/Act		Solid Green	HW	Normal—FE link established
		Blink Green	HW	Normal—FE activity
		Off	HW	No link or no power

Fan Tray LED

TABLE 1-4 Fan Tray LED Definitions

LED	Color & State		Set by	Significance
Fan Status		Solid Green	HW	Normal—Fan Tray is OK
		Solid Yellow	HW	Not normal—Single fan failure
		Solid Red	HW	Not normal—Multiple fan failure
		Off	HW	No power

Power Supply LEDs

TABLE 1-5 Power Supply LED Definitions

LED	Color & State		Set by	Significance
AC OK		Solid Green	HW	Normal—Power Supply is OK
		Off	HW	Not normal—Not OK or no power
O.T.P.		Solid Red	HW	Not normal—Failure detected
		Off	HW	Normal—No failure detected or no power
DC OK		Solid Green	HW	Normal—Primary output OK
		Off	HW	Not normal—Primary output not OK or no power

CHAPTER 2

FIPS 140-2 Level 2 Features

Intended Level of Security

The Aruba 5000 WLAN Switch and its modules are intended to meet overall FIPS 140-2 Level 2 requirements as shown in Table 2-1.

TABLE 2-1 Intended Level of Security

Section	Section Title	Level
1	Cryptographic Module Specification	2
2	Cryptographic Module Ports and Interfaces	2
3	Roles, Services, and Authentication	2
4	Finite State Model	2
5	Physical Security	2
6	Operational Environment	N/A
7	Cryptographic Key Management	2
8	EMI/EMC	2
9	Self-tests	2
10	Design Assurance	2
11	Mitigation of Other Attacks	N/A

Physical Security

The Aruba 5000 WLAN Switch is a scalable, multi-processor standalone network device and is enclosed in a 19" rack-mountable, robust steel housing. The switch enclosure is resistant to probing and is opaque within the visible spectrum. The enclosure of the switch has been designed to satisfy FIPS 140-2 Level 2 physical security requirements.

The left, top, right, and bottom surfaces are irremovable. The rear panel can be removed by unscrewing fifteen screws. The switch has a number of hot-swappable components at front side, including four slots for supervisor and line cards, one fan tray, and three power supplies. Each of the components is attached with two screws. The supervisor card has a PCMCIA slot which provides a clear view of the module's internal components.

For physical security, the switch requires Tamper-Evident Labels (TELs) to allow the detection of the opening of the chassis covers; the removal or replacement of any module or cover plate, and to block the PCMCIA slot and the Serial console port.

To protect the Aruba 5000 WLAN Switch from any tampering with the product, TELs should be applied by the Crypto Officer as covered under “Tamper-Evident Labels” on page 41.

Operational Environment

The operational environment is non-modifiable. The control plane Operating System (OS) is Linux, a real-time, multi-threaded operating system that supports memory protection between processes. Access to the underlying Linux implementation is not provided directly. Only Aruba Wireless Networks provided interfaces are used, and the CLI is a restricted command set.

Logical Interfaces

All of these physical interfaces are separated into logical interfaces defined by FIPS 140-2, as described in the following table:

TABLE 2-2 FIPS 140-2 Logical Interfaces

FIPS 140-2 Logical Interface	Module Physical Interface
Data Input Interface	10/100 Mbps Ethernet (FE) ports Gigabit Ethernet (GE) ports
Data Output Interface	10/100 Mbps Ethernet (FE) ports Gigabit Ethernet (GE) ports
Control Input Interface	Power switch Reset button 10/100 Mbps Ethernet (FE) ports PCMCIA drive (disabled) Serial console port (disabled)
Status Output Interface	10/100 Mbps Ethernet (FE) ports LEDs Serial console port (disabled)
Power Interface	Power Supply POE

Data input and output, control input, status output, and power interfaces are defined as follows:

- Data input and output are the packets that use the firewall, VPN, and routing functionality of the modules.
- Control input consists of manual control inputs for power and reset through the power and reset switch. It also consists of all of the data that is entered into the switch while using the management interfaces.
- Status output consists of the status indicators displayed through the LEDs, the status data that is output from the switch while using the management interfaces, and the log file.

  LEDs indicate the physical state of the module, such as power-up (or rebooting), utilization level, activation state (including fan, ports, and power). The log file records the results of self-tests, configuration errors, and monitoring data.
- A power supply is used to connect the electric power cable. Operating power is also provided to a compatible Power Over Ethernet (POE) device when connected. The power is provided through the connected Ethernet cable.

The switch distinguishes between different forms of data, control, and status traffic over the

network ports by analyzing the packets header information and contents.

Roles and Services

The Aruba 5000 WLAN Switch supports role-based authentication. There are two main roles in the switch (as required by FIPS 140-2 Level 2) that operators may assume: a Crypto Officer role and User role. The Administrator maps to the Crypto-Officer role and the client Users map to the User role.

Crypto Officer Role

The Crypto Officer role has the ability to configure, manage, and monitor the switch. Three management interfaces can be used for this purpose:

- CLI

  The Crypto Officer can use the CLI to perform non-security-sensitive and security-sensitive monitoring and configuration. The CLI can be accessed remotely by using the SSHv2 secured management session over the Ethernet ports or locally over the serial port. In FIPS mode, the serial port is disabled.

- Web Interface

  The Crypto Officer can use the Web Interface as an alternative to the CLI. The Web Interface provides a highly intuitive, graphical interface for a comprehensive set of switch management tools. The Web Interface can be accessed from a TLS-enabled Web browser using HTTPS (HTTP with Secure Socket Layer) on logical port 4343.

- Bootrom Monitor Mode

  In Bootrom monitor mode, the Crypto Officer can reboot, update the Bootrom, issue file system-related commands, modify network parameters, and issue various show commands. The Crypto Officer can only enter this mode by pressing any key during the first four seconds of initialization. Bootrom Monitor Mode is disabled in FIPS mode.

The Crypto Officer can also use SNMPv1 to remotely perform non-security-sensitive monitoring and use `get` and `getnext` commands. See the table below for descriptions of the services available to the Crypto Officer role.

TABLE 2-3 Crypto-Officer Services

Service	Description	Input	Output	CSP Access
SSH	Provide authenticated and encrypted remote management sessions while using the CLI	SSH key agreement parameters, SSH inputs, and data	SSH outputs and data	Diffie-Hellman key pair (read/ write access), session key for SSH (read/write access), PRNG keys (read access); Crypto Officer's password (read access)
IKE/IPSec	Provide authenticated and encrypted remote management sessions to access the CLI functionality	IKE inputs and data; IPSec inputs, commands, and data	IKE outputs, status, and data; IPSec outputs, status, and data	RSA key pair for IKE (read access), Diffie-Hellman key pair for IKE (read/write access), pre-shared keys for IKE (read access); Session keys for IPSec (read/write access)
Bootrom Monitor Mode	Reboot, update the Bootrom, issue file system-related commands, modify network parameters, and issue various show commands (disabled in FIPS mode)	Commands and configuration data	Status of commands, configuration data	None
Configuring Network Management	Create or specify master encryption key; create management Users and set their password and privilege level; configure the SNMP agent	Commands and configuration data	Status of commands and configuration data	Master encryption key (read/ write access), Crypto Officer's password for CLI (read/write access)

TABLE 2-3 Crypto-Officer Services (Continued)

Service	Description	Input	Output	CSP Access
Configuring the T1/E1 Subsystem Interfaces	Define the T1/E1 subsystem functionality	Commands and configuration data	Status of commands and configuration data	None
Configuring the module Platform	Define the platform subsystem software of the module by entering Bootrom Monitor Mode, File System, fault report, message logging, and other platform related commands	Commands and configuration data	Status of commands and configuration data	None
Configuring Hardware Controllers	Define synchronization features for module	Commands and configuration data	Status of commands and configuration data	None
Configuring the Internet Protocol	Set IP functionality	Commands and configuration data	Status of commands and configuration data	None
Configuring Frame Relay	Define Frame Relay interface features	Commands and configuration data	Status of commands and configuration data	None
Configuring ISDN	Configure BRI/PRI functionality on module	Commands and configuration data	Status of commands and configuration data	None
Configuring Quality of Service (QoS)	Configure QOS values for module	Commands and configuration data	Status of commands and configuration data	None

TABLE 2-3 Crypto-Officer Services (Continued)

Service	Description	Input	Output	CSP Access
Configuring the VPN	Configure Public Key Infrastructure (PKI); configure the Internet Key Exchange (IKE) Security Protocol; configure the IPSec protocol	Commands and configuration data	Status of commands and configuration data	RSA keys pair (read/write access), Pre-shared key (read/write access)
Configuring DHCP	Configure DHCP on module	Commands and configuration data	Status of commands and configuration data	None
Configuring Security	Define security features for module, including Access List, AAA, and firewall functionality	Commands and configuration data	Status of commands and configuration data	AAA User password (read/write access), RADIUS password (read/write access)
HTTPS over TLS	Secure browser connection over Transport Layer Security acting as a Crypto Officer service (web management interface).	TLS inputs, commands, and data	TLS outputs, status, and data	RSA key pair for TLS

User Role

The User role can access the switch's IPSec and IKE services. Service descriptions and inputs/outputs are listed in the following table:

TABLE 2-4 User Service

Service	Description	Input	Output	CSP Access
IKE/IPSec	Access the module's IPSec services in order to secure network traffic	IPSec inputs, commands, and data	IPSec outputs, status, and data	RSA key pair for IKE (read access); Diffie-Hellman key pair for IKE (read and write access); pre-shared keys for IKE (read access)
HTTPS over TLS	Access the module's TLS services in order to secure network traffic	TLS inputs, commands, and data	TLS outputs, status, and data	RSA key pair for TLS

Authentication Mechanisms

The Aruba 5000 WLAN Switch supports role-based authentication. Role-based authentication is performed before the Crypto Officer enters privileged mode using admin password via Web Interface and SSH or by entering enable command and password in console. Role-based authentication is also performed for User authentication.

This includes password and RSA-based authentication mechanisms. The strength of each authentication mechanism is described below.

TABLE 2-5 Estimated Strength of Authentication Mechanisms

Authentication Type	Role	Strength
Password-based authentication (CLI and Web Interface)	Crypto Officer	Passwords are required to be at least six characters long. Numeric, alphabetic (upper and lowercase), and keyboard and extended characters can be used, which gives a total of 95 characters to choose from. Therefore, the number of potential six-character passwords is 95^6 (735091890625).
RSA-based authentication (IKE)	User	RSA signing and verification is used to authenticate to the module during IKE. This mechanism is as strong as the RSA algorithm using a 1024 bit key pair.
Pre-shared key-based authentication (IKE)	User	Pre-shared keys must be at least six characters long and up to 64 bytes long. Even if only uppercase letters were used without repetition for a six character pre-shared key, the probability of randomly guessing the correct sequence is one in 165,765,600.

Unauthenticated Services

The Aruba 5000 WLAN Switch can perform SNMP management, VLAN, bridging, firewall, routing, and forwarding functionality without authentication. These services do not involve any cryptographic processing.

The SNMPv1 can be used to remotely perform non-security-sensitive monitoring. SNMP uses a clear text community string for authentication. Also, the Bootrom Monitor mode is disabled in FIPS mode by placing a Tamper Evident Label (TEL) over the serial interface of the Supervisor Card.

Implemented Algorithms

FIPS-approved cryptographic algorithms have been implemented in hardware and software. Hardware encryption acceleration is provided for bulk cryptographic operations for the following FIPS approved algorithms:

- SHA-1–Byte Oriented (Certificate # 244)
- HMAC SHA-1 (Certificate # 244, vendor affirmed)
- Triple DES–CBC, keying options 1, 2, 3 (Certificate #261)
- AES–CBC, key sizes 128, 192, 256 (Certificate # 159)

Hardware encryption is provided for the following non-FIPS-approved algorithm.

- MD5

The software implementation is done using OpenSSL crypto library version 0.9.7c. The software implements the following FIPS-approved algorithms:

- SHA-1–Byte Oriented (Certificate # 243)
- HMAC SHA-1 (Certificate # 243, vendor affirmed)
- DES–CBC (Certificate #262)—for legacy use only
- Triple DES–CBC, keying options 1, 2, 3 (Certificate #260)
- AES–CBC, key sizes 128, 192, 256 (Certificate # 158)
- PKCS #1 (RSA) signature–1024 bits (Certificate #9)
- PRNG (ANSI X9.31)–64 bits (Certificate # 8)

OpenSSL v0.9.7c is also used to implements the following non-FIPS-approved algorithms in the switch software:

- MD5
- RC4
- Diffie Hellman

Critical Security Parameters

The following are the Critical Security Parameters (CSPs) used in the switch.

TABLE 2-6 CSPs Used in Aruba 5000 WLAN Switch

CSPs	CSPs type	Generation	Storage and Zeroization	Use
Key Encryption Key (KEK)	TDES key	Hard Coded	Stored in Flash.	Encrypts IKE, pre-shared keys, and database file
Pre-shared keys	64 character pre-shared key	External	Stored encrypted in Flash with the KEK. Zeroized by changing (updating) the pre-shared key through the User interface.	User and module authentication during IKE
IPSec session keys	56-bit DES, 168-bit TDES, or 128/192/256-bit AES keys; HMAC SHA-1 key	Established during the Diffie-Hellman key agreement	Stored in plaintext in volatile memory. Zeroized when the session is closed.	Secure IPSec traffic
IKE Diffie-Hellman private key	768/1024-bit Diffie-Hellman private key	Generated internally during IKE negotiations	Stored in the volatile memory. Zeroized after the session is closed.	Used in establishing the session key for an IPSec session
IKE Diffie-Hellman public key	768/1024-bit Diffie-Hellman public key	Generated internally during IKE negotiations	Stored in plaintext in memory.	Key agreement during IKE
SSH session keys	168-bit TDES or 128/192/256-bit AES keys; HMAC SHA-1 keys	Established during the SSH key exchange using the Diffie-Hellman key agreement	Stored in plaintext in volatile memory. Zeroized when the session is closed.	Secure SSH traffic

TABLE 2-6 CSPs Used in Aruba 5000 WLAN Switch (Continued)

CSPs	CSPs type	Generation	Storage and Zeroization	Use
SSH Diffie-Hellman Public Key	768/1024-bit Diffie-Hellman private key	Generated internally during the SSH session negotiations	Stored in the volatile memory. Zeroized after the session is closed.	Used in establishing the session key for an SSH session.
SSH Diffie-Hellman Private Key	768/1024-bit Diffie-Hellman public key	Generated internally during the SSH session negotiations	Stored in the volatile memory. Zeroized after the session is closed.	Used in establishing the session key for an SSH session.
TLS session key	AES 128, 192, 256	Generated in the module	Stored in plaintext in volatile memory. Zeroized when the session is closed.	Key agreement during 802.1x connection
TLS session key	RC4	Generated in the module. This is not a FIPS approved mechanism and is not considered a CSP. The information is given here for sake of completeness.	Stored in plaintext in volatile memory. Zeroized when the session is closed.	Key agreement during 802.1x connection
TLS RSA Public Key	RSA 1024 bit key	Generated externally during the TLS session negotiations	Stored in the volatile memory. Zeroized on reboot.	Used in establishing the session key for a TLS session.

TABLE 2-6 CSPs Used in Aruba 5000 WLAN Switch (Continued)

CSPs	CSPs type	Generation	Storage and Zeroization	Use
TLS RSA Private Key	RSA 1024 bit key	Generated externally during the TLS session negotiations	Stored in the volatile memory. Zeroized on reboot.	Used in establishing the session key for a TLS session.
Passwords	6-character password	External	Stored encrypted in Flash with KEK. Zeroized by either deleting the password configuration file or by overwriting the password with a new one.	Authentication for accessing the management interfaces, RADIUS authentication
PRNG seeds	Seed key (24 bytes, TDES 2-keying option) and seed (8 bytes)	Predetermined values	In volatile memory only. Zeroized on reboot.	Seed PRNGs

Encryption Keys and Passwords

- PRNG–The switch implements the PRNG specified in ANSI X9.31, A.2.4 in software. All keys are generated using this implementation.

- Key Encryption Key (KEK)–The KEK is hard-coded in the image. The KEK encrypts IKE RSA keys pairs, pre-shared keys, and User database. KEK can be zeroized by erasing the image.

- IKE RSA

  The IKE RSA key pair is used for IKE authentication and is generated externally while enrolling a certificate for the switch with the specified Certificate Authority (CA). The RSA key pair can only be generated after declaring the CA the switch should use (by executing certain CA Identity Mode commands). After declaring the CA to be used, the Crypto Officer can enter command to generate the keys pair. After the key pair is generated, the certificate request is sent to the chosen CA, who will sign the certificate containing the public key.

  The private key is stored encrypted in flash memory, encrypted with the encryption key. The key pair can be zeroized by overwriting the current one or wiping the flash memory.

- IKE User RSA

  The IKE User RSA public key is used for User authentication. During IKE the User sends the switch its digital certificate, which is verified by the switch. The certificate is stored encrypted with the encryption key. The User public key can be zeroized by overwriting it by replacing it with a new key or by erasing the flash memory.

  Pre-shared keys can be used instead of certificates during IKE authentication. The pre-shared key must be entered by the Crypto Officer with the Username being the IP address and the password being the pre-shared key. The pre-shared keys are stored encrypted in flash memory and can be zeroized by either overwriting them with new ones or by erasing the flash memory.

- IKE Diffie-Hellman–The IKE Diffie-Hellman key pairs are generated during IKE for use for the key establishment during IKE. The key pairs are generated internally and are ephemeral key pairs that are stored in plaintext in memory. The key pairs can be zeroized by rebooting the switch.

- SSH Diffie-Hellman–The SSH Diffie-Hellman key pair is generated internally and is used during the SSH key establishment. This key pair is an ephemeral key pair and is stored in plaintext in memory. It can be zeroized by rebooting the switch.

- TLS RSA–The TLS RSA key pair is generated externally and is used during the TLS key establishment. This key pair is an ephemeral key pair and is stored in plaintext in memory. It can be zeroized by rebooting the module.

- Session Keys–The TLS, SSH and IPSec session keys are used to secure TLS, SSH and IPSec traffic respectively by providing confidentiality (DES, Triple-DES, and AES) and integrity (HMAC SHA-1). SSH and IPSec secrets are established using the Diffie-Hellman key agreement. The TLS, SSH and IPSec session keys are ephemeral keys and are stored in plaintext in memory. They can be zeroized by rebooting the module.

- Software Integrity–The software integrity test is done using a CRC-32 test.

- Passwords

  Passwords are used for authentication. The Crypto Officer will not be able to access the CLI management interface until authenticated successfully. Passwords are also used to remotely authenticate Users during RADIUS. Also, passwords must be at least six characters long.

  All passwords are stored encrypted (database files are encrypted with the encryption key) in flash memory, except for the Crypto Officer passwords. Crypto Officer password is stored encrypted in the configuration file.

  All passwords can be zeroized by overwriting them with new ones or erasing the flash memory.

Self-Tests

The Aruba 5000 WLAN Switch performs both power-up and conditional self-tests. In the event any self-test fails, the switch will enter an error state, log the error, and reboot automatically.

The switch performs the following power-up self-tests:

- Software Integrity Test–The switch checks the integrity of its software using an error detection code. The CRC-32 checksum is used to verify that the operational image and the boot image have not been modified.
- Cryptographic Algorithm Tests–These tests are run at power-up for the DES encryption/decryption, Triple-DES encryption/decryption, and AES encryption/decryption, HMAC SHA-1 calculation/verification, RSA signing/verifying, and the PRNG random data generation.
- RSA Pair-wise Consistency Test (sign/verify)–The RSA pair-wise consistency test takes a RSA private key and signs the hash of some data. The resulting signed data is compared to the hashed data before it was signed. If the two values are equal, then the test fails. If the two values differ, the public key is used to verify the signed data and the resulting value is compared to the original hashed data. If the two values are not equal the test fails.
- RSA Pair-wise Consistency Test (encrypt/decrypt) - The RSA pair-wise consistency test takes a RSA private key and encrypts some data. The resulting cipher is compared to the hashed data before it was encrypted. If the two values are equal, then the test fails. If the two values differ, the public key is used to decrypt the cipher and the resulting value is compared to the original plaintext. If the two values are not equal the test fails.
- Bypass Mode Test–The switch performs a SHA-1 hash value verification to ensure that the firewall policies have not been modified.

Following Conditional Self-tests are performed in the switch:

- Continuous Random Number Generator Test–This test is run upon generation of random data by the switch's random number generators to detect failure to a constant value.
- Bypass Mode Test–The switch performs a SHA-1 check value verification to ensure that the firewall policies have not been modified.

Self-test results are logged in a log file. Upon successful completion of the power-up self tests, the module logs a `KATS: passed` message into a log file. Confirm the file update by checking the associated time of the file. The status can be view by using the `show log`

`crypto all` CLI command.
In the event of a hardware KATs failure, the log file records:

```
HW Crypto POST: FAILEDSibyte HW Crypto Failed[Date]@[Time]
The POST Test failed!!!!
Rebooting…
```

In the event of a software tests failure, the log file records:

```
SW Crypto POST: FAILEDSibyte HW Crypto Failed[Date]@[Time]
The POST Test failed!!!!
Rebooting…
```

Mitigation of Other Attacks

The Aruba 5000WLAN Switch does not claim to mitigate attacks in a FIPS mode of operation.

CHAPTER 3

Installing the Switch

This chapter covers the physical installation of the Aruba 5000 WLAN Switch with FIPS 140-2 Level 2 validation. The Crypto Officer is responsible for ensuring that the following procedures are used to place the switch in a FIPS-approved mode of operation.

This chapter covers the following installation topics:

- Precautions to be observed during installation
- Requirements for the switch components and rack mounting gear
- Selecting a proper environment for the switch
- Mounting the switch in a rack
- Connecting power to the switch

Pre-Installation Checklist

You will need the following during installation:

- ☐ Aruba 5000 WLAN Switch components (see "Minimum Switch Configuration" on page 30)
- ☐ Aruba 5000 rack mounting kit (see "Rack Mounting Kit" on page 34)
- ☐ Phillips or cross-head screwdriver
- ☐ 19-inch equipment rack, or equivalent
- ☐ 3U rack space with 10 cm (4 inches) clearance to the left, right, front, and rear of the rack
- ☐ Another person to help position the switch
- ☐ Aruba power cord for each power supply, rated to at least 10 A with IEC320 connector
- ☐ Adequate power supplies and electrical power (refer to the *Aruba 5000 WLAN Switch Installation Guide*)
- ☐ Cool, non-condensing air 0 to 40 ºC (32 to 104 ºF). May require air conditioning.
- ☐ Management Station (PC) with 10/100 Mbps Ethernet port and SSH software.
- ☐ A 4- or 8-conductor Category 5 UTP Ethernet cable

Precautions

CAUTION—Installation should be performed only by a trained technician.

Dangerous voltage in excess of 240VAC is always present while the Aruba Power Supply Module is plugged into an electrical outlet. Remove all rings, jewelry, and other potentially conductive material before working with this product.

Never insert foreign objects into the chassis, the power supply, or any other component, even when the power supplies have been turned off, unplugged, or removed.

Main power is fully disconnected from the switch only by unplugging all installed power supplies' power cords from their power outlets. For safety reasons, make sure the power outlets and plugs are within easy reach of the operator.

Do not handle electrical cables which are not insulated. This includes any network cables.

To minimize electrical hazard, keep water and other fluids away from the product.

Comply with electrical grounding standards during all phases of installation and operation of the product. Do not allow the switch chassis, network ports, power supplies, or mounting brackets to contact any device, cable, object, or person attached to a different electrical ground. Also, never connect the device to external storm grounding sources.

Installation or removal of the chassis or any module must be performed in a static-free environment. The proper use of anti-static body straps and mats is strongly recommended.

Modules must be kept in anti-static packaging when not installed in the chassis.

Do not ship or store this product near strong electromagnetic, electrostatic, magnetic or radioactive fields.

Do not disassemble the chassis or any module. They have no internal User-serviceable parts. When service or repair is needed, contact Aruba Wireless Networks (see page viii).

The Security Kit

The Aruba 5000 WLAN Switch FIPS 140-2 Level 2 Security Kit modifies the standard Aruba 5000 WLAN Switch hardware, software, and documentation to assure FIPS 140-2 Level 2 validation.

Product Examination

The Crypto Officer receives the switch in a carton. The Crypto Officer should examine the carton for evidence of tampering. Tamper-evidence includes tears, scratches, and other irregularities in the packaging.

Package Contents

The product carton should include the following:

- Aruba 5000 WLAN Switch
- Rack mounting kit
- Aruba AirOS™ 2.1.0.0 Build 7862 (preinstalled on the Supervisor Card)
- Aruba User Documentation CD
- Tamper-Evident Labels
- Assorted documentation including the *Aruba 5000 WLAN Switch FIPS 140-2 Level 2 Release Supplement* (this document) covering the product Security Policy.

Minimum Switch Configuration

The Aruba 5000 WLAN Switch must include the following basic components (as shown in (as shown in Figure 1-1 on page 4):

- One modular switch chassis (HW-5000-CHASF, 3300012 Rev. 02)
- One fan tray (HW-5000-FTF, 3400016 Rev. 01)
- One Supervisor Card (SC-5000-C2 (3300009 Rev. 02)) in Slot 1/0
- One Line Card (LC-5000-24FE-2GE (3300007 Rev. 01) or LC-5000-24FE-2GE-SPOE (3300001 Rev. 03)) in Slot 0/0
- Adequate Power Supply (HW-5000-PSU-200 (2500009 Rev. 02) or HW-5000-PSU-400 (2500016 Rev. 09))

NOTE—The number and type of power supplies required depends on the number and type of line cards installed in the chassis (refer to the *Aruba 5000 WLAN Switch Installation Guide*).

The switch is shipped with all required modules installed.

Additional Modules

Additional modules are available for expanding the Aruba 5000 WLAN Switch or as replacements. Only the following modules should be used with the switch in a FIPS-approved mode:

TABLE 3-1 FIPS-Approved Components

Component Name	Model Number
Aruba 5000 WLAN Switch chassis (with security kit)	HW-5000-CHASF (3300012 Rev. 02)
Aruba 5000 WLAN Switch Fan tray (with security kit)	HW-5000-FTF (3400016 Rev. 01)
Aruba 5000 WLAN Switch Supervisor Card	SC-5000-C2 (3300009 Rev. 02)
Aruba 5000 WLAN Switch Line Card	LC-5000-24FE-2GE (3300007 Rev. 01)
Aruba 5000 WLAN Switch SPOE Line Card	LC-5000-24FE-2GE-SPOE (3300001 Rev. 03)
Aruba 5000 WLAN Switch Power Supply 200W	HW-5000-PSU-200 (2500009 Rev. 02)
Aruba 5000 WLAN Switch Power Supply 400W	HW-5000-PSU-400 (2500016 Rev. 09)

If you have received replacement or expansion modules separately from the chassis, refer to the *Aruba 5000 WLAN Switch Installation Guide* for instructions on installing each module.

NOTE—By adding modules, you are increasing the switch's total power load. Depending on the modules installed, you may be required to add power supplies to the switch and/or increase the capacity of your site's electrical systems. For details, refer to the *Aruba 5000 WLAN Switch Installation Guide*.

Selecting a Location

The Aruba 5000 WLAN Switch, like other network and computing devices, requires an "electronics friendly environment. The Crypto Officer should select a location to mount the switch where the switch is assured of the following considerations:

- Reliable power

  Make sure that your electrical outlet is compatible with the switch power supplies.

  The power supplies (HW-5000-PSU-200 (2500009 Rev. 02) rated at 200 W total and HW-5000-PSU-400 (2500016 Rev. 09) rated at 400 W total) are auto-ranging to accept 85 to 264 VAC, at 50 to 60 Hz.

  The power cords must be rated to 10 A and conform to grounded electrical standards in the country where the product is operated.

  Use of a power line conditioner or Uninterruptable Power Supply (UPS) can decrease or mitigate problems caused by power service fluctuations. Make sure that the output of any power shaping device is compatible with the switch power supplies.

NOTE—Up to three HW-5000-PSU-400 (2500016 Rev. 09) power supplies can be installed in any power supply bay on the Aruba 5000 WLAN Switch.

A maximum of two HW-5000-PSU-200 (2500009 Rev. 02) power supplies can be installed in the Aruba 5000 WLAN Switch. Because of the HW-5000-PSU-200 (2500009 Rev. 02) chassis design, these power supplies cannot be installed next to each other. If two of these power supplies are being installed, they must be located in the two outside bays, leaving the middle bay unpopulated.

To maintain proper ventilation as well as physical security, install a blanking panel (included) to cover the vacant bay.

- Cool, non-condensing ventilation

  For proper operation, the switch requires a controlled environment with a regulated nominal temperature range between 10 and 35 °C (52 to 95 °F). Humidity must be kept at non-condensing levels between 5 and 95%.

  Where a large number of electrical devices are working in the same area, additional air conditioning or air circulation equipment may be required.

- Ample space

  For proper air circulation, leave at least 10 cm (4 inches) clearance for the vents on the left, right, front, and rear of the chassis.

  Leave additional space in front of the chassis to access power cords, network cables, and indicator LEDs.

- Limited electromagnetic interference

  For best operation, keep the switch and all cords and cables at least 0.7 meters (2 feet) from fluorescent lighting fixtures, and 2 meters (6 feet) from photocopiers, radio transmitters, electric generators, and other sources of strong electromagnetic interference.

Rack Mounting Kit

Using the included rack mounting kit, the switch can be mounted in a standard 19-inch network equipment rack. The rack mounting kit contains the following parts:

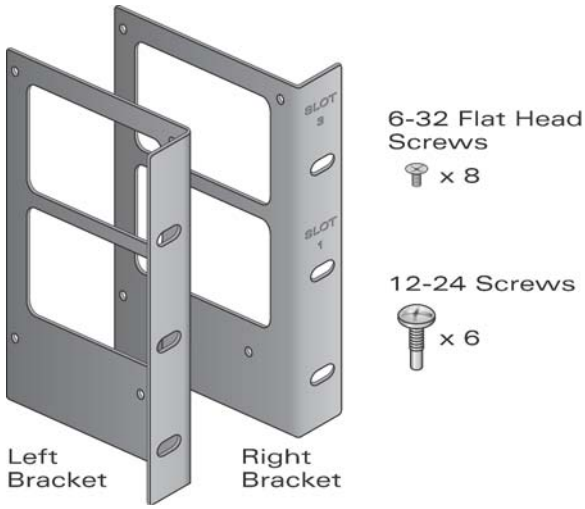

FIGURE 3-1 Rack Mounting Kit

NOTE—The six 12-24 screws are intended for securing the switch to the rack. Some racks require different screws which are not included. Make sure that you have the correct screws or fasteners for your rack system before attempting to mount the switch.

Mounting the Chassis

Step 1 Make sure that your rack environment meets requirements (see "Selecting a Location" on page 33).

Step 2 Attach the rack mounting brackets to the switch chassis as shown in Figure 3-2.

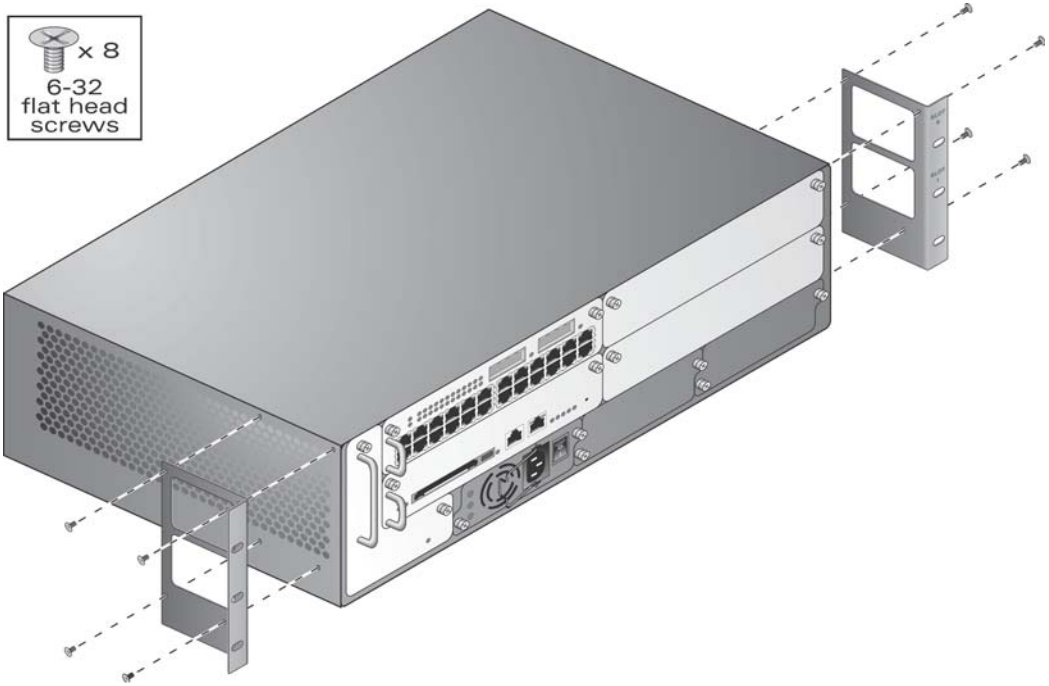

FIGURE 3-2 Attaching the Rack Mounting Brackets

The bracket stamped with slot numbers is for the right-hand side of the switch. Orient both brackets so that the narrow flange faces the front. When placed properly, the brackets' large rectangular voids will be positioned over the side vents to allow proper air flow during operation.

Use a Phillips or cross-head screwdriver to attach each bracket securely with four 6-32 flat head screws (included).

Step 3 Attach the switch to the rack.

CAUTION—To avoid personal injury or damage to equipment, get help for lifting and positioning the switch. Also, do not install the switch in any fashion where instability or uneven mechanical loading may occur.

NOTE—For proper operation, the switch requires an ambient air temperature between 0 and 40 ºC (32 to 104 ºF). Make sure your rack environment is in compliance.

Position the switch chassis in the equipment rack and align the brackets' mounting holes with the corresponding holes in your rack frame.

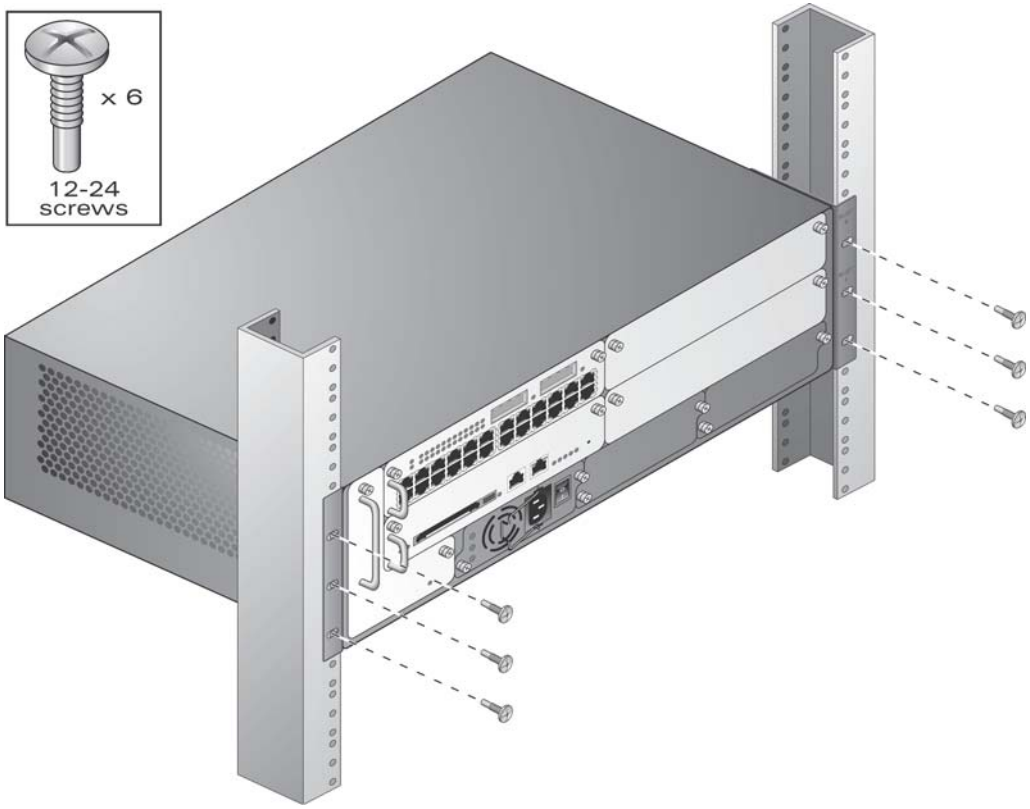

FIGURE 3-3 Mounting the Aruba 5000 WLAN Switch

Use a Phillips or cross-head screwdriver to secure the switch to the rack with three 12-24 screws (included) for each mounting bracket.

NOTE—Some cabinets require different screws which are not included. Make sure that you use the correct screws or fasteners for your rack system.

Connecting Power

CAUTION—This procedure should be performed only by a trained technician.

Step 1 Make sure you understand the procedure and all precautions.

Before beginning, read the entire procedure. Make sure you understand all the precautions in these steps as well as those on page 29.

Step 2 Make sure that the installed power supplies can handle the switch's power load.

The number of power supplies required for your switch depends on the number and type of modules installed. For details, refer to the *Aruba 5000 WLAN Switch Installation Guide.*

Step 3 Make sure that your site's electrical systems can handle the switch's power load.

- Each standard power supply (HW-5000-PSU-200 (2500009 Rev. 02) rate at 200 W total or HW-5000-PSU-400 (2500016 Rev. 09) rated at 400 W total) is auto-ranging to accept 90-132/ 170-264 VAC, at 50 to 60 Hz.

  Each optional power supply (HW-5000-PSU-400 (2500016 Rev. 09)) is rated at 400 W total and is auto-ranging to accept 85 to 264 VAC, at 50 to 60 Hz.

  Depending on the switch's total power load, you may be required to increase the capacity of your site's electrical systems. For details, refer to the *Aruba 5000 WLAN Switch Installation Guide.*

NOTE—Use of a power line conditioner or Uninterruptable Power Supply (UPS) can decrease or mitigate problems caused by power service fluctuations. Make sure that the output of any power shaping device is compatible with the switch power supplies.

Step 4 Make sure the power switch on the power supply is in the Off (O) position.

CAUTION—Never attach a power cord to a power supply while its power switch is in the On (|) position. Make sure the power switch is Off (O) first.

Step 5 Attach the power cord to the power supply.

Plug an appropriate power cord into the power input socket. The socket accepts a power cord with a standard IEC320 plug.

CAUTION—For proper safety and performance, the power cord must be rated to 10 A and conform to grounded electrical standards in the country where the product is operated.

NOTE—Swing the cord retaining clip to the left before attaching the power cord.

Step 6 Secure the power cord.

When the power cord is attached, swing the power cord retaining clip to the right as shown in Figure 3-4. This will hold the plug in place and help prevent it from being removed accidentally.

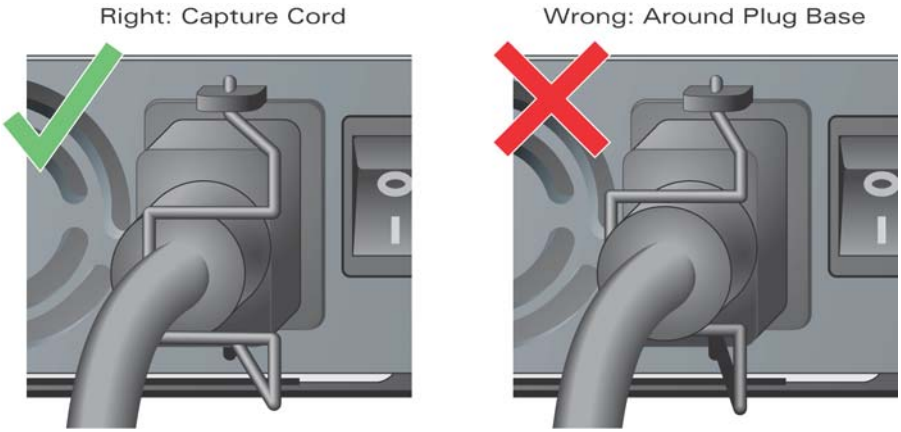

FIGURE 3-4 Using the Power Cord Retaining Clip

Step 7 Attach the power cord to a proper electrical outlet.

CAUTION—For safety reasons, make sure the power outlets and plugs are within easy reach of the operator and can be quickly disconnected if necessary.

Repeat Step 4 through Step 7 for each installed power supply.

Once power is connected, you can perform the power-on test.

Power-On Test

Once the switch is physically installed, the Crypto Officer should run the power-on test.

Step 8 Turn on all installed power supplies in quick succession.

For each power supply, place the power switch in the on (|) position.

NOTE—To avoid overloading the first power supplies to be turned on while using line cards that provide Power Over Ethernet to attached devices, all required power supplies should be turned on at roughly the same time (within about three seconds).

Step 9 Check for the proper power indicators.

Immediately upon power up, you should observe the following:

- All power supply AC OK and DC OK LEDs light solid green
- The fan tray Fan Status LED lights solid green and you should be able to feel significant airflow blowing from the chassis vents at each of the three fan positions
- The line card Power LED lights solid green
- The supervisor card Power LED lights solid green
- The supervisor card Utilization LEDs begin blinking sequentially from left to right and then right to left

Step 10 Connect a management station to a network port on the switch.

Connect one end of a 4- or 8-conductor Category 5 UTP Ethernet cable to your management PC or laptop FE port. Attach the other end of the cable to one of the FE ports on any LC module on the switch.

NOTE—The FE management port on the SC cannot be used for the initial power-on test.

Step 11 Initiate an SSH connection to the switch.

From the management station, connect to the switch's default management IP address, 192.168.100.1. Once the connection is established, the switch will prompt for a User log in:

```
(aruba)
User: _
```

When the User prompt appears, the switch has successfully booted.

Step 12 Check for the appropriate operation indicators.

Once the system has successfully booted, you should observe the following:

- The power supply AC OK and DC OK LEDs are still lit solid green
- The fan tray Fan Status LED is still solid green
- One the line card:
  - The Power LED is still solid green
  - The Status LED lights solid green
- On the supervisor card:
  - The power LED is still solid green
  - The Status and Active/Standby LEDs are solid green
  - The Utilization LED panel reflects the expected level of usage.

    In a typical power-on test performed after initial installation, a single blinking LED will indicate utilization of under 1%.

NOTE—For more information on LED behavior, see "Indicator LEDs" on page 7.

Once the Aruba WLAN Switch has passed the initial power-up test, attach the Tamper-Evident Labels (TELs) as described below.

Tamper-Evident Labels

After testing, the Crypto Officer must apply Tamper-Evident Labels (TELs) to the switch. When applied properly, the TELs allow the Crypto Officer to detect the opening of the chassis cover, the removal or replacement of modules or cover plates, or physical access to restricted ports. Vendor provides **FIPS 140** designated TELs which have met the physical security testing requirements for tamper evident labels under the FIPS 140-2 Standard. TELs are not endorsed by the Cryptographic Module Validation Program (CMVP).

Reading TELs

Once applied, the TELs included with the switch cannot be surreptitiously broken, removed, or reapplied without an obvious change in appearance:

FIGURE 3-5 Tamper-Evident Labels

Each TELs also has a unique serial number to prevent replacement with similar labels.

Required TEL Locations

The Aruba 5000 WLAN Switch requires a minimum of 12 TELs to be applied as follows:

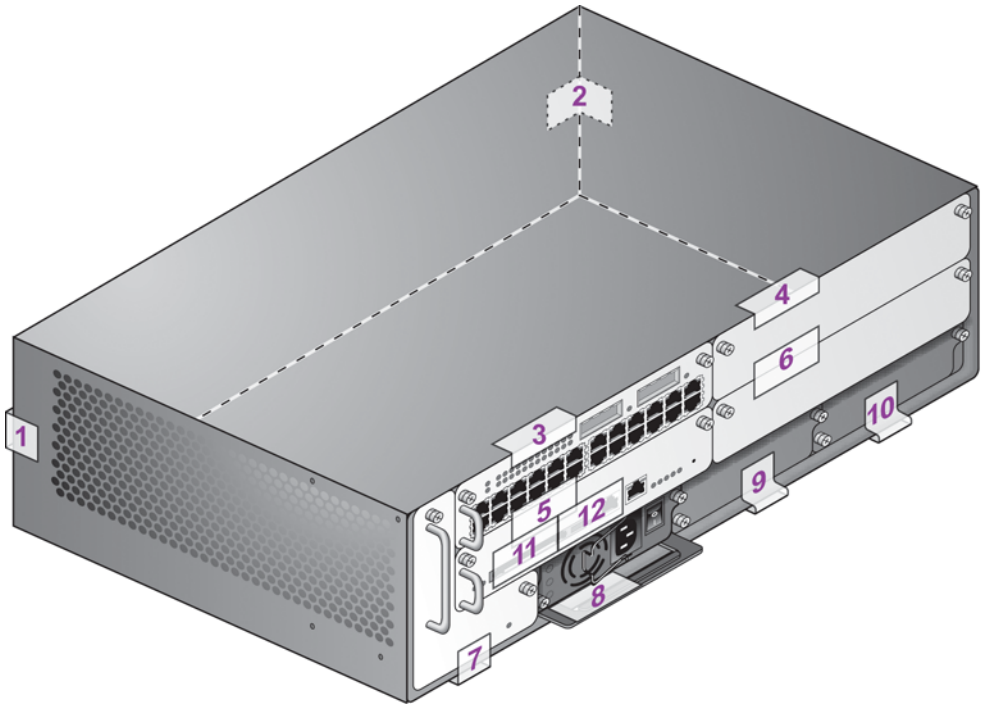

FIGURE 3-6 Required TELs for the Aruba 5000 WLAN Switch

To Detect Opening the Chassis Cover

Step 1 Spanning the left side and rear of the chassis

Step 2 Spanning the right side and rear of the chassis

To Detect the Removal of Any Module or Cover Plate

Step 3 Spanning the Slot 0/0 LC faceplate and the top of the chassis

Step 4 Spanning the Slot 0/1 LC (or blank) faceplate and the top of the chassis

Step 5 Spanning the Slot 1/0 SC faceplate and the Slot 1/1 faceplate

Step 6 Spanning the Slot 1/1 LC (or blank) faceplate and the Slot 0/1 faceplate

Step 7 Spanning the fan tray faceplate and the bottom of the chassis

Step 8 Spanning the PS1 handle (or blank faceplate) and the bottom of the chassis

Step 9 Spanning the PS2 handle (or blank faceplate) and the bottom of the chassis

Step 10 Spanning the PS3 handle (or blank faceplate) and the bottom of the chassis

To Detect Access to Restricted Ports

Step 11 Spanning the PCMCIA slot on the SC

Step 12 Spanning the Serial port on the SC

Applying TELs

The Crypto Officer should employ TELs as follows:

- Before applying a TEL, make sure the target surfaces are clean and dry.
- Do not cut, trim, punch, or otherwise alter the TEL.
- Apply the wholly intact TEL firmly and completely to the target surfaces.
- Ensure that TEL placement is not defeated by simultaneous removal of multiple modules.
- Allow 24 hours for the TEL adhesive seal to completely cure.
- Record the position and serial number of each applied TEL in a security log.

Once the TELs are applied, the Crypto Officer (CO) should perform initial setup and configuration as described in the next chapter.

CHAPTER 4

Ongoing Management

The Aruba 5000 WLAN Switch meets FIPS 140-2 Level 2 requirements. The information below describe how to keep the switch in FIPS-approved mode of operation. The Crypto Officer must ensure that the switch is kept in a FIPS-approved mode of operation.

Crypto Officer Management

The Crypto Officer must ensure that the switch is always operating in a FIPS-approved mode of operation. This can be achieved by ensuring the following:

- FIPS mode must be enabled on the switch before Users are permitted to use the switch (see "Enabling FIPS Mode" on page 49)
- Passwords must be at least six characters long.
- VPN services can only be provided by IPSec or L2TP over IPSec.
- Access to the switch Web Interface is permitted only using HTTPS over a TLS tunnel. Basic HTTP and HTTPS over SSL are not permitted.
- Only SNMP read-only may be enabled.
- If cryptographic algorithms can be set for services (such as HTTPS, L2 AES-CBC, SSH, and IKE/IPSec), only FIPS-approved algorithms can be specified, which include AES, DES (for legacy use only), Triple-DES, SHA-1, HMAC SHA-1, and RSA signature and verification.
- TFTP can only be used to load backup and restore files. These files are: Configuration files (system setup configuration), the WMS database (radio network configuration), and log files. (FTP and TFTP over IPSec can be used to transfer configuration files.)

- The switch logs must be monitored. If a strange activity is found, the Crypto Officer should take the switch off line and investigate.
- The Tamper-Evident Labels (TELs) must be regularly examined for signs of tampering.
- Switch software upgrades are not allowed in FIPS mode.
- When installing expansion or replacement modules, use only FIPS-approved modules (see "Additional Modules" on page 32), following the FIPS-approved configurations (see Table 1-1 on page 6) replace TELs affected by the change, and record the reason for the change, along with the new TEL locations and serial numbers, in the security log.

User Guidance

The User accesses the switch VPN functionality as an IPSec client. Although outside the boundary of the switch, the User should be directed to be careful not to provide authentication information and session keys to others parties.

CHAPTER 5

Setup & Configuration

The Aruba 5000 WLAN Switch meets FIPS 140-2 Level 2 requirements (Certificate #491). The sections below describe how to place and keep the switch in FIPS-approved mode of operation. The Crypto Officer (CO) must ensure that the switch is kept in a FIPS-approved mode of operation.

Connecting to the Switch

Step 1 Power up the Aruba 5000 WLAN Switch.

Step 2 Connect a management station to a network port on the switch.

Connect one end of a 4- or 8-conductor Category 5 UTP Ethernet cable to your management PC or laptop FE port. Attach the other end of the cable to one of the FE ports on any LC module on the switch.

NOTE—The FE management port on the SC cannot be used for initial setup.

Step 3 Initiate an SSH connection to the switch.

From the management station, connect to the switch's default management IP address, 192.168.100.1. Once the connection is established, the switch will prompt for a User log in:

```
(aruba)
User: _
```

Logging in with the CLI

Once connected to the switch, the CO should log in as an Administrator:

```
(aruba)
User: admin
password: **********

(aruba) >
```

The default Administrator User name is `admin`. As shown, the administrator will be prompted to enter their password. The default password is `arubaadmin`. and is masked by asterisks (`*`) while entered.

When properly logged in, the CLI User prompt (>) will be displayed. The CLI User mode has a very limited command set. To access the full CLI command set, the CO should enter the privileged mode.

Privileged Mode

To access the full CLI command set from the initial CLI User prompt (>), the administrator must enter the privileged mode using the `enable` command:

```
(aruba) > enable
password: ***********

(aruba) #
```

As shown, the Administrator will be prompted to enter the privileged password. The default password for the privileged mode is `arubaenable`. The password is masked by asterisks (`*`) while entered.

Once enabled, the CLI privileged prompt (#) will be displayed. In this mode, the switch can be configured and managed via the CLI.

NOTE—The CLI supports all administration functions. Other management options (such as the Aruba Web Interface) are also available, but support a subset of the CLI functions.

See the *Aruba AirOS 2.0 User's Guide* for complete configuration information.

Enabling FIPS Mode

The switch can operate in two modes: the FIPS-approved mode, and the standard non-FIPS mode. By default, the switch operates in non-FIPS mode.

For FIPS compliance, User cannot be allowed to access the switch until after the CO changes the mode of operation to FIPS mode.

In order to place the switch into the FIPS-approved operating mode, the CO must enter the following commands from the privileged CLI prompt:

```
(aruba) # configure terminal
(aruba) (config) # fips enable
```

NOTE—All WEP features are disabled when FIPS mode is enabled.

Refer to"Ongoing Management" on page 45 for more information on conditions that have to be met in order to operate an Aruba 5000 WLAN Switch in FIPS mode.

FIPS Commands

The following FIPS-related commands are supported in this release of AirOS:

- fips enable/disable
- tar
- wipe

fips

A config command (configure terminal) that controls FIPS mode.

To turn on FIPS, enter:

```
(Aruba5000) (config)# fips enable
```

To turn off FIPS, enter:

```
(Aruba5000) (config)# fips disable
```

tar

A general purpose, enable mode command used to manage file archives. The syntax for the **tar** command is:

```
(Aruba5000) (config) # tar ?
clean       remove a tar file
crash       tar the crash directory to crash.tar
flash       tar and compress the /flash directory to flash.tar.gz
logs        tar the logs directory to logs.tar
```

The **tar clean** command takes the following options:

```
(Aruba5000) (config) # tar clean ?
crash     remove crash.tar
flash     remove flash.tar.gz
logs      remove logs.tar
```

wipe

The wipe command is an enable mode command that erases flash.

To delete the entire flash from the Aruba 5000 WLAN Switch, enter:

```
(Aruba5000) (config) # wipe
```

Use caution when applying this command. A wipe operation cannot be undone.

Logging in with the GUI

Use your Web browser (Internet Explorer 6.0 or higher with SSH enabled) to access the Aruba 5000 WLAN Switch using an SSH connection.

Step 1 To start the RF Director software, enter the following URL in your Web browser:

`https://`<*WLAN switch IP address or hostname*>

The default IP address is 192.168.100.1.

For example:

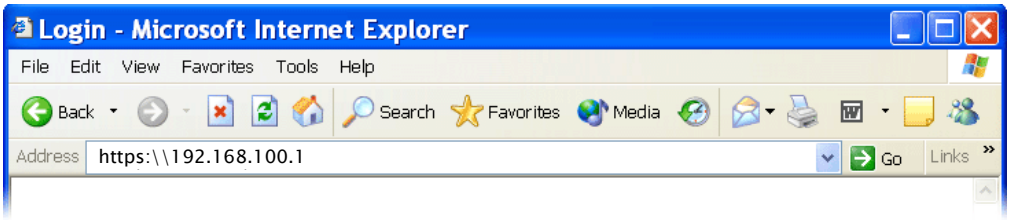

If your PC has access to the appropriate interface, you will be prompted to login.

Step 2 Log in using the Web User account:

Upon successful login, the RF Director start page will appear. For information on using the GUI, refer to the *Aruba 5000 WLAN Switch User Guide v.2.0.*

This page intentionally blank.

APPENDIX A

Acronyms

AAA	Accounting, Authentication, Authorization
AES	Advanced Encryption Standard
AM	Air Monitor
ANSI	American National Standards Institute
AP	Access Point
CBC	Cipher Block Chaining
CLI	Command Line Interface
CMVP	Cryptographic Module Validation Program
CO	Crypto Officer
CSE	Communications Security Establishment
CSP	Critical Security Parameter
EDC	Error Detection Code
EMC	Electromagnetic Compatibility
EMI	Electromagnetic Interference
FCC	Federal Communication Commission
FE	Fast Ethernet
FIPS	Federal Information Processing Standard
FTP	File Transfer Protocol

GE	Gigabit Ethernet
GUI	Graphic User Interface
HMAC	Hashed Message Authentication Code
HTTP	Hyper Text Transfer Protocol
HTTPS	Hyper Text Transfer Protocol Secure
Hz	Hertz
IKE	Internet Key Exchange
IPSec	Internet Protocol Security
KAT	Known Answer Test
KEK	Key Encryption Key
L2	Layer 2
L2TP	Layer-2 Tunneling Protocol
LAN	Local Area Network
LED	Light Emitting Diode
LC	Line Card
MAC	Message Authentication Code
MD5	Message Digest 5
NIST	National Institute of Standards and Technology
NVLAP	National Voluntary Laboratory Accreditation Program
OS	Operating System
PCMCIA	Personal Computer Memory Card International Association
PKCS	Public-Key Cryptography Standards/Public Key Cryptographic System
PRNG	Pseudo Random Number Generator
PS	Power Supply
QoS	Quality of Service
RAM	Random Access Memory
RC4	Ron's Code 4 (Ron being Ron Rivest of RSA)

RJ	Registered Jack
RSA	Rivest Shamir and Adleman
SC	Supervisor Card
SHA	Secure Hash Algorithm
SNMP	Simple Network Management Protocol
SP	Security Parameters
SPOE	Serial & Power Over Ethernet
SSH	Secure Shell
SSL	Secure Sockets Layer
TEL	Tamper-Evident Label
TFTP	Trivial File Transfer Protocol
TLS	Transport Layer Security
UTP	Unshielded Twisted Pair
VPN	Virtual Private Network
WLAN	Wireless Local Area Network