Aruba 800, 5000 and 6000™

Mobility Controller with ArubaOS 2.4.1.0-FIPS Software Non-Proprietary Security Policy

ARUBA™
The Mobile Edge Company

FIPS 140-2 Level 2 Release Supplement

Version 06

Copyright

Copyright © 2006 Aruba Wireless Networks, Inc. All rights reserved.

Specifications in this manual are subject to change without notice.

Originated in the USA.

Trademarks

Aruba Networks, Aruba The Mobile Edge Company, ArubaOS, Aruba 800-04, Aruba 800-16, Aruba 2400, Aruba 5000/6000, Aruba 60/61, Aruba 2E, Aruba 8E, Aruba 24E, Aruba 60/61, Aruba 40/41, Aruba 65, Aruba 70, and Aruba 80 are trademarks of Aruba Wireless Networks, Inc. in the United States and certain other countries.

All other trademarks or registered trademarks appearing in this manual are owned by their respective companies.

Contents

Preface vii

Purpose of this Document vii
Related Documents vii
Product Manuals vii
Additional Product Information viii
Text Conventions ix
Contacting Aruba Wireless Networks. x

Chapter 1 **The Aruba 800/5000/6000 Mobility Controller** . . . 1

Overview 1
Physical Description 3
Dimensions 3
Cryptographic Module Boundaries 3
Chassis 4
Interfaces. 6
Aruba 5000/6000 Line Card Interfaces 6
Aruba 5000/6000 Supervisor Card Interfaces 6
Aruba 5000/6000 Power Supply Interfaces 7
Aruba 5000/6000 Indicator LEDs 8
Aruba 800-series Interfaces 10
Intended Level of Security 13
Physical Security 13

Chapter 2 **FIPS 140-2 Level 2 Features** 13

Operational Environment 14
Logical Interfaces 14
Roles and Services 16
Crypto Officer Role 16
User Role 19
Authentication Mechanisms 20
Unauthenticated Services 20
Cryptographic Key Management 21
Implemented Algorithms 21
Critical Security Parameters 22
Encryption Keys and Passwords 24
Self-Tests 27
Mitigation of Other Attacks 28
XSec 28
Wireless Intrusion Detection 30

Chapter 3 **Installing the Switch** 33

Pre-Installation Checklist 34
The Security Kit 36
Product Examination 36
Package Contents 36
Minimum Switch Configuration for the Aruba 6000 36
Additional Modules for the Aruba 6000 37
Selecting a Location 38
Rack Mounting Kit 39
Mounting the Chassis 40
Connecting Power 43
Tamper-Evident Labels 48
Reading TELs 48
Required TEL Locations 49
Applying TELs 51
Crypto Officer Management 53

Chapter 4 **Ongoing Management** 53
User Guidance 54
Connecting to the Switch 55
Logging in with the CLI 55

Chapter 5 **Set Up and Configuration** 55
Privileged Mode 56
Enabling FIPS Mode 56
FIPS Commands 57
Logging in with the GUI 58

Appendix A **Acronyms** 59

Preface

This security policy document can be copied and distributed freely.

Purpose of this Document

This release supplement provides information regarding the Aruba 800/5000/6000 Mobility Controller with FIPS 140-2 Level 2 validation from Aruba Wireless Networks. The material in this supplement modifies the general Aruba 800/5000/6000 Mobility Controller hardware and software documentation included with this product and should be kept with your Aruba product documentation.

This supplement primarily covers the non-proprietary Cryptographic Module Security Policy for the Aruba 800/5000/6000 Mobility Controller. This security policy describes how the switch meets the security requirements of FIPS 140-2 Level 2 and how to place and maintain the switch in a secure FIPS 140-2 mode. This policy was prepared as part of the FIPS 140-2 Level 2 validation of the product.

FIPS 140-2 (Federal Information Processing Standards Publication 140-2, *Security Requirements for Cryptographic Modules*) details the U.S. Government requirements for cryptographic modules. More information about the FIPS 140-2 standard and validation program is available on the National Institute of Standards and Technology (NIST) Web-site at:

http://csrc.nist.gov/cryptval

Related Documents

Product Manuals

The following items are part of the complete installation and operations documentation included with this product:

- *Aruba 800/5000/6000 Mobility Controller FIPS Release Supplement (this document)*
- *Aruba 5000/6000 Mobility Controller Installation Guide*
- *Aruba 800-series Mobility Controller Installation Guide*

- *Aruba ArubaOS 2.4 User Guide*
- *Aruba AP Installation Guide*

Additional Product Information

More information is available from the following sources:

- The Aruba Wireless Networks Web-site contains information on the full line of products from Aruba Networks:

  http://www.arubanetworks.com

- The NIST Validated Modules Web-site contains contact information for answers to technical or sales-related questions for the product:

  http://csrc.ncsl.nist.gov/cryptval

Text Conventions

The following conventions are used throughout this manual to emphasize important concepts:

TABLE 1 Text Conventions

Type Style	Description
Italics	This style is used to emphasize important terms and to mark the titles of books.
System items	This fixed-width font depicts the following: • Sample screen output • System prompts • Filenames, software devices, and certain commands when mentioned in the text.
Commands	In the command examples, this bold font depicts text that the User must type exactly as shown.
<Arguments>	In the command examples, italicized text within angle brackets represents items that the User should replace with information appropriate to their specific situation. For example: # **send** *<text message>* In this example, the User would type "send" at the system prompt exactly as shown, followed by the text of the message they wish to send. Do not type the angle brackets.
[Optional]	In the command examples, items enclosed in brackets are optional. Do not type the brackets.
{ Item A | Item B }	In the command examples, items within curled braces and separated by a vertical bar represent the available choices. Enter only one choice. Do not type the braces or bars.

Contacting Aruba Wireless Networks

Web Site

- Main Site http://www.arubanetworks.com
- Support http://www.arubanetworks.com/support

E-mail

- Sales sales@arubanetworks.com
- Support support@arubanetworks.com

Telephone Numbers

- Main 408-227-4500
- Fax 408-227-4550
- Sales 408-754-1201
- Support

  In the US: 800-WI-FI-LAN (800-943-4526)+

  France: 33 (0) 170725559+44 (0)

  UK: 2071275989+49 (0)

  Germany: 69380977228+ 00 1

  All Other: 408-754-1200

ARUBA

1322 crossman avenue | sunnyvale california 94089

tel 408 227 4500 | fax 408 227 4550

www.arubanetworks.com

The Aruba 800/5000/6000 Mobility Controller

1

This chapter introduces the Aruba 800/5000/6000 Mobility Controller with FIPS 140-2 Level 2 validation. It describes the purpose of the switch, its physical attributes, and its interfaces.

Overview

Aruba Wireless Networks' has developed a purpose-built Wireless LAN voice and data switching solution designed to specifically address the needs of large-scale WiFi network deployments for Government agencies and global enterprises. Aruba's Mobility Controller solution provides advanced security and management of the corporate RF environment and enforces User security and service policies to both wired and wireless Users.

The Aruba Wireless FIPS 140-2 Level 2 validated Mobility Controlling platform serves value-add high speed data and QoS assured voice services to thousands of mobile wireless Users simultaneously from a single, cost effective, redundant and scalable solution that performs centralized functionality for:

- Uncompromised User security, authentication and encryption
- Stateful LAN-speed firewalling
- VPN termination
- Wireless intrusion detection, prevention and rogue containment
- RF Air monitoring
- Powerful packet processing switching
- Mobility management
- Advanced RF management
- Advanced User and network service / element management

The Aruba FIPS 140-2 Level 2 validated Mobility Controller solution is a highly available, modular and upgradeable switching platform which connects, controls, secures, and intelligently integrates wireless Access Points and Air Monitors into the wired LAN, serving as a gateway between a wireless network and the wired network. The wireless network traffic from the APs is securely tunneled over a L2/L3 network and is terminated centrally on the switch via 10/100/1000 Ethernet physical interfaces where it is authenticated, assigned the appropriate security policies and VLAN assignments and up-linked onto the wired network.

The Aruba Mobility Controller solution consists of the three major components:

- Aruba Mobility Controller. This is an enterprise-class switch into which multiple Access Points (APs) and Air Monitors (AMs) may be directly or in-directly (tunneled over a L2/L3 network) connected and controlled.
- Aruba Wireless Access Point. This is a next-generation wireless transceiver which functions as an AP or AM. Although third-party APs can be used with the Aruba WLAN system, the Aruba AP provides the most comprehensive features and simpler integration.
- Aruba ArubaOS Switch Software. This software intelligently integrates the Mobility Controller and APs to provide load balancing, rate limiting, self healing, authentication, mobility, security, firewalls, encryption, and centralization for monitoring and upgrades.

The switch configurations tested during the cryptographic module testing included:

- Aruba 800-16 (fiber-optic connector option).
- Aruba 5000 with one Supervisor Card I module installed.
- Aruba 5000 with two Supervisor Card I modules installed.
- Aruba 6000 with one Supervisor Card I module and one Supervisor Card II module installed.
- Aruba 6000 with two Supervisor Card II modules installed.
- The exact software versions tested were A800_2.4.1.0-FIPS and A5000_2.4.1.0-FIPS.

Physical Description

See product on page 36 for a list of what ships with this product.

Dimensions

The Aruba 5000/6000 Mobility Controller has the following physical dimensions:

- 3 RU chassis is designed to fit in a standard 19" rack. A separate mounting kit is needed for a 23" rack.
- Size:
  - Width 17.4" (19" rack width)
  - Height 5.25" (3 RU)—3.5" for the card slots plus 1 RU for the power supply slots
  - Depth 14"
- Maximum weight: Up to 26.5 kg (58 lbs.)

The Aruba 800-series Mobility Controller has the following physical dimensions:

- 1 RU chassis is designed to fit in a standard 19" rack. A separate mounting kit is needed for a 23" rack.
- Size:
  - Width 17.4" (19" rack width)
  - Height 1.75" (1 RU)
  - Depth 13.1"
- Maximum weight: Up to 4.5 kg (10 lbs.)

Cryptographic Module Boundaries

For FIPS 140-2 Level 2 validation, the Aruba 800/5000/6000 Mobility Controller has been validated as a multi-processor standalone cryptographic module. The 19" rack-mountable steel chassis physically encloses the complete set of hardware and software components and represents the cryptographic boundary of the switch. The cryptographic boundary is defined as encompassing the top, front, left, right, rear, and bottom surfaces of the case.

Chassis

The Aruba 5000/6000 Mobility Controller chassis is designed to be modular. All of the modular components, consisting of the switching supervisor and network line cards, the fan tray, and the power supplies, are accessible from the front of the chassis and are field replaceable and hot-swappable.

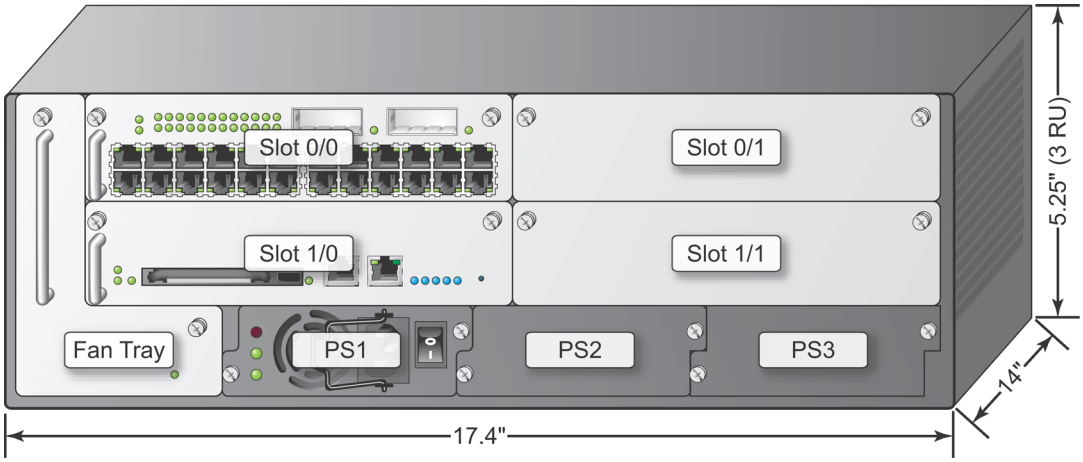

Figure 1-1 The Aruba 5000/6000 Mobility Controller Chassis

Figure 1-1 shows the front panel of the Aruba 5000/6000 Mobility Controller, and illustrates the following:

- Slot 0/0 is for the required Line Card that provides network ports for connecting wireless Access Points, as well as wired LAN segments.
- Slots 0/1 and 1/1 are for optional Line Card or Supervisor Card modules to provide extra port capacity.
- Slot 1/0 is for the Supervisor Card. The Supervisor Card processes all traffic from the Line Cards, performs cryptographic functions, and controls all management features.
- The hot-swappable fan tray cools the switch. The fan tray pulls air from right to left, as viewed from the front of the chassis, across the installed cards.

PS1, PS2, and PS3 are for Power Supply modules. The number of power supplies required for the system depends on the number and type of Line Cards installed, and whether to include redundancy for fault tolerance.

The Aruba 800-series Mobility Controller chassis is 1U not-modular chassis.

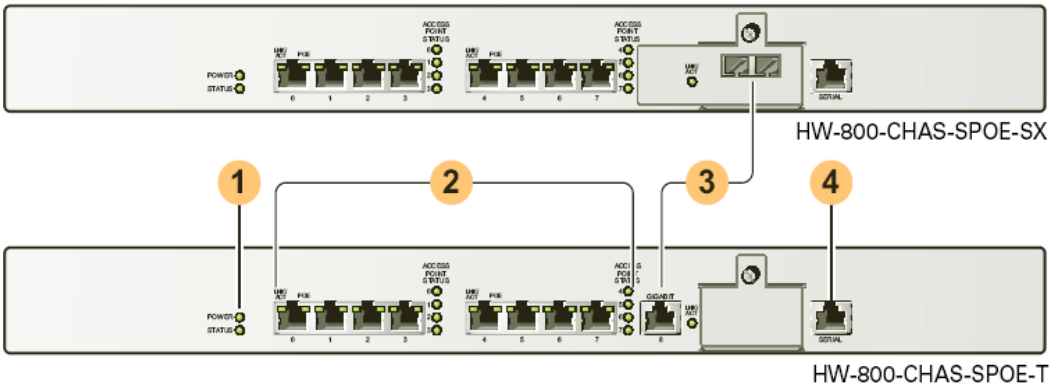

Figure 1-2 The Aruba 800-series Mobility Controller Chassis

Figure 1-2 shows the front panel of the Aruba 800-series Mobility Controller, and illustrates the following:

- System indicator LEDs 1 indicate power state and status of the device
- Eight Fast Ethernet ports 2 provide network connectivity
- Gigabit Ethernet uplink port 3 is used for high-speed connection to the wired LAN. Standard chassis model HW-800-CHAS-SPOE-T employs a copper connector. Optional chassis model HW-800-CHAS-SPOE-SX employs a fiber-optic connector.
- Serial Console port 4 is for connecting to a local management console.

Interfaces

Aruba 5000/6000 Line Card Interfaces

The Line Card contains the following interfaces:

- 24 FE ports on the standard Aruba 5000/6000 Mobility Controller Line Card (LC-2G24F (3300026 Rev. 01))

  FE ports are used to connect Access Points and Wired LAN segments to the switch. These ports provide 10/100 Mbps Ethernet connectivity.

  These FE ports accept 4- or 8-conductor Category 5 UTP Ethernet cables with an RJ-45 male connector and automatically adjust for straight-through or crossover cables.

- 24 FE + SPOE ports on the optional SPOE Line Card (LC-2G24FP(3300024 Rev. 01))

  When connected directly to an IEEE 802.3af POE compatible device, the port provides 10/100 Mbps Ethernet connectivity, as well as operational power through same cable.

  When using SPOE, an 8-conductor straight-through Category 5 UTP Ethernet cable with an RJ-45 male connector is required.

- 2 Gigabit Ethernet (GE) ports

  The GE port provides high-bandwidth uplinks between the Aruba 5000/6000 Mobility Controller and the wired LAN. The GE socket accepts a variety of Gigabit Interface Converters for versatility in selecting optical and electrical interfaces.

  with an RJ-45 male connector is required.

- The optional GE-only Line Card (LC-2G (3300029-01)) has 2 GE ports only.

Aruba 5000/6000 Supervisor Card Interfaces

The Supervisor Card contains the following interfaces:

- One 10/100 Mbps Ethernet (FE) management port

  This port provides access to the Command Line Interface (CLI) and a Web Interface for complete system management and troubleshooting; or for connecting a separate management network.

  The port accepts a 4- or 8- conductor Category 5 UTP Ethernet cable with an RJ-45 male connector and automatically adjusts for straight-through or crossover cables.

- Recessed reset used to reset the switch if necessary.

NOTE: The Supervisor Card also includes a PCMCIA drive and serial port, but these interfaces are disabled in FIPS mode.

Aruba 5000/6000 Power Supply Interfaces

The Aruba 5000/6000 Mobility Controller supports up to three independent, load balancing, and redundant power supplies. Each power supply has its own independent toggle-switch to control the power.

Aruba 5000/6000 Indicator LEDs

The Aruba 5000/6000 Mobility Controller modules contain a number of LEDs to indicate physical status conditions. A description of the various LEDs is given in the following tables.

Line Card LEDs

Table 1-1 Line Card LED Definitions

LED	Color & State		Set by	Significance
Power		Solid Green	HW	Normal—Card has power
		Off	HW	No power
Status		Solid Green	SW	Normal—Card is OK
		Solid Yellow	Reset	Normal during reset—Card being initialized by software
		Solid Red	SW	Not normal—Card has failed
		Off	SW	No power or FPGA initializing
FE Lnk/Act		Solid Green	HW	Normal—FE link is established
		Blink Green	HW	Normal—FE activity
		Solid Yellow	SW	Not normal—Failures on the link
		Off	SW	No link or no power
POE		Solid Green	SW	Normal—Power over Ethernet (POE) is being delivered
		Solid Yellow	SW	Not normal—POE was requested but denied
		Off	SW	POE was not requested and is not being provided, or no power
AP Status		Solid Green	SW	Normal— The AP is OK.
		Blink Green	SW	Normal—Shows AP activity, can do blink with a HW counter
		Solid Yellow	SW	Not normal— There is an AP error
		Solid Red	SW	Not normal—AP is not OK
		Off	SW	No power
GE Lnk/Act		Solid Green	SW	Normal—GE link is established
		Blink Green	HW	Normal—Indicates GE activity
		Solid Yellow	SW	Not normal—There are failures on the link
		Off	SW	No link or no power

Supervisor Card LEDs

Table 1-2 Supervisor Card LED Definitions

LED	Color & State	Set By	Significance
Power	Solid Green	HW	Normal—Card has power
	Off	HW	No power
Status	Solid Green	SW	Normal—Card is OK
	Solid Yellow	SW	Normal—Card is booting
	Solid Red	SW	Not normal—Card failure
	Off	SW	No power
Active/ Standby	Solid Green	SW	Normal—Active Supervisor Card
	Solid Yellow	SW	Normal—Standby Supervisor Card
	Off	SW	No power
Utilization	Green (solid & blinking)	SW	Five LEDs in a row indicate processing activity. Each LED indicates an additional 20% activity level has been reached. The right-most lit LED should blink.
	Off	SW	No power
PCMCIA	Solid Green	HW	Normal—Indicates PCMCIA card is being accessed
	Off	HW	No activity or no power
FE Lnk/Act	Solid Green	HW	Normal—FE link established
	Blink Green	HW	Normal—FE activity
	Off	HW	No link or no power

Fan Tray LED

Table 1-3 Fan Tray LED Definitions

LED	Color & State	Set by	Significance
Fan Status	Solid Green	HW	Normal—Fan Tray is OK
	Solid Yellow	HW	Not normal—Single fan failure
	Solid Red	HW	Not normal—Multiple fan failure
	Off	HW	No power

Power Supply LEDs

Table 1-4 Power Supply LED Definitions

LED	Color & State		Set by	Significance
AC OK		Solid Green	HW	Normal—Power Supply is OK
		Off	HW	Not normal—Not OK or no power
O.T.P.		Solid Red	HW	Not normal—Failure detected
		Off	HW	Normal—No failure detected or no power
DC OK		Solid Green	HW	Normal—Primary output OK
		Off	HW	Not normal—Primary output not OK or no power

Aruba 800-series Interfaces

The Aruba 800-series device has the following interfaces:

- 8 FE + SPOE ports used to connect Access Points and Wired LAN segments to the switch. These ports provide 10/100 Mbps Ethernet connectivity.

  When connected directly to an IEEE 802.3af POE compatible device, the port provides 10/100 Mbps Ethernet connectivity, as well as operational power through same cable.

  When using SPOE, an 8-conductor straight-through Category 5 UTP Ethernet cable with an RJ-45 male connector is required.

  The network ports also provide serial connectivity over the same Ethernet cable, allowing convenient access to device console interfaces.

- Gigabit Ethernet (GE) port provides high-bandwidth uplinks between the Aruba 800-series Mobility Controller and the wired LAN. Standard model HW-800-CHAS-SPOE-T employs a copper connector. Optional model HW-800-CHAS-SPOE-SX employs a fiber-optic connector.
- Serial Console port is used for connecting to a local management console.
- Power Input Socket on the back of the switch accepts a power cord with a standard IEC320 connector.
- Power Indicator LED is on when the switch is receiving proper power.
- Status Indicator LED is on when the switch is booted and functioning properly, and off when the switch is booting or has failed.
- Each FE network port and the GE uplink port has its own LNK/ACT LED. The LED is off, when there is no link on the port, green when a link is established and no activity is detected, and flashing green when the port is transmitting or receiving data.

- Each FE network port has its own POE LED. The LED is off, when the port is disabled or the attached device has not requested power, green when POE is provided to the attached device, and amber when the attached device has requested power, but POE is not being provided by the port.

FIPS 140-2 Level 2 Features

2

Intended Level of Security

The Aruba 800/5000/6000 Mobility Controller and its modules are intended to meet overall FIPS 140-2 Level 2 requirements as shown in Table 2-1.

Table 2-1 Intended Level of Security

Section	Section Title	Level
1	Cryptographic Module Specification	2
2	Cryptographic Module Ports and Interfaces	2
3	Roles, Services, and Authentication	2
4	Finite State Model	2
5	Physical Security	2
6	Operational Environment	N/A
7	Cryptographic Key Management	2
8	EMI/EMC	2
9	Self-tests	2
10	Design Assurance	2
11	Mitigation of Other Attacks	2

Physical Security

The Aruba 800/5000/6000 Mobility Controller is a scalable, multi-processor standalone network device and is enclosed in a 19" rack-mountable, robust steel housing. The switch enclosure is resistant to probing and is opaque within the visible spectrum. The enclosure of the switch has been designed to satisfy FIPS 140-2 Level 2 physical security requirements.

For the Aruba 5000/6000 the left, top, right, and bottom surfaces are irremovable. The rear panel can be removed by unscrewing fifteen screws. The switch has a number of hot-swappable components at front side, including four slots for

supervisor and line cards, one fan tray, and three power supplies. Each of the components is attached with two screws. The supervisor card has a PCMCIA slot which provides a clear view of the module's internal components

For the Aruba 800-series the left, right, front, rear and bottom surfaces are irremovable. The top panel can be removed by unscrewing nine screws.

For physical security, the Aruba 5000/6000 switch requires Tamper-Evident Labels (TELs) to allow the detection of the opening of the chassis covers; the removal or replacement of any module or cover plate, and to block the PCMCIA slot and the Serial console port.

The Aruba 800-series Mobility Controller requires Tamper-Evident Labels (TELs) to allow the detection of the opening of the chassis cover and to block the Serial console port.

To protect the Aruba 800/5000/6000 Mobility Controller from any tampering with the product, TELs should be applied by the Crypto Officer as covered under “Tamper-Evident Labels” on page 48.

Operational Environment

The operational environment is non-modifiable. The control plane Operating System (OS) is Linux, a real-time, multi-threaded operating system that supports memory protection between processes. Access to the underlying Linux implementation is not provided directly. Only Aruba Wireless Networks provided interfaces are used, and the CLI is a restricted command set.

Logical Interfaces

All of these physical interfaces are separated into logical interfaces defined by FIPS 140-2, as described in the following table

Table 2-2 FIPS 140-2 Logical Interfaces

FIPS 140-2 Logical Interface	Module Physical Interface
Data Input Interface	10/100 Mbps Ethernet (FE) ports Gigabit Ethernet (GE) port(s)
Data Output Interface	10/100 Mbps Ethernet (FE) ports Gigabit Ethernet (GE) port(s)
Control Input Interface	Power switch (Aruba 5000/6000 only) Reset button (Aruba 5000/6000 only) 10/100 Mbps Ethernet (FE) ports PCMCIA drive (disabled) (Aruba 5000/6000 only) Serial console port (disabled)
Status Output Interface	10/100 Mbps Ethernet (FE) ports LEDs Serial console port (disabled)
Power Interface	Power Supply POE

Data input and output, control input, status output, and power interfaces are defined as follows:

- Data input and output are the packets that use the firewall, VPN, and routing functionality of the modules.
- Control input consists of manual control inputs for power and reset through the power and reset switch. It also consists of all of the data that is entered into the switch while using the management interfaces.
- Status output consists of the status indicators displayed through the LEDs, the status data that is output from the switch while using the management interfaces, and the log file.

  LEDs indicate the physical state of the module, such as power-up (or rebooting), utilization level, activation state (including fan, ports, and power). The log file records the results of self-tests, configuration errors, and monitoring data.
- A power supply is used to connect the electric power cable. Operating power is also provided to a compatible Power Over Ethernet (POE) device when connected. The power is provided through the connected Ethernet cable.

The switch distinguishes between different forms of data, control, and status traffic over the network ports by analyzing the packets header information and contents.

Roles and Services

The Aruba 800/5000/6000 Mobility Controller supports role-based authentication. There are two main roles in the switch (as required by FIPS 140-2 Level 2) that operators may assume: a Crypto Officer role and User role. The Administrator maps to the Crypto-Officer role and the client Users map to the User role.

Crypto Officer Role

The Crypto Officer role has the ability to configure, manage, and monitor the switch. Three management interfaces can be used for this purpose:

- CLI

  The Crypto Officer can use the CLI to perform non-security-sensitive and security-sensitive monitoring and configuration. The CLI can be accessed remotely by using the SSHv2 secured management session over the Ethernet ports or locally over the serial port. In FIPS mode, the serial port is disabled.

- Web Interface

  The Crypto Officer can use the Web Interface as an alternative to the CLI. The Web Interface provides a highly intuitive, graphical interface for a comprehensive set of switch management tools. The Web Interface can be accessed from a TLS-enabled Web browser using HTTPS (HTTP with Secure Socket Layer) on logical port 4343.

- Bootrom Monitor Mode

  In Bootrom monitor mode, the Crypto Officer can reboot, update the Bootrom, issue file system-related commands, modify network parameters, and issue various show commands. The Crypto Officer can only enter this mode by pressing any key during the first four seconds of initialization. Bootrom Monitor Mode is disabled in FIPS mode.

The Crypto Officer can also use SNMPv1 to remotely perform non-security-sensitive monitoring and use get and getnext commands. See the table below for descriptions of the services available to the Crypto Officer role.

Table 2-3 Crypto-Officer Services

Service	Description	Input	Output	CSP Access
SSH	Provide authenticated and encrypted remote management sessions while using the CLI	SSH key agreement parameters, SSH inputs, and data	SSH outputs and data	Diffie-Hellman key pair (read/ write access), session key for SSH (read/write access), PRNG keys (read access); Crypto Officer's password (read access)
IKE/IPSec	Provide authenticated and encrypted remote management sessions to access the CLI functionality	IKE inputs and data; IPSec inputs, commands, and data	IKE outputs, status, and data; IPSec outputs, status, and data	RSA key pair for IKE (read access), Diffie-Hellman key pair for IKE (read/write access), pre- shared keys for IKE (read access); Session keys for IPSec (read/write access)
Bootrom Monitor Mode	Reboot, update the Bootrom, issue file system-related commands, modify network parameters, and issue various show commands (disabled in FIPS mode)	Commands and configuration data	Status of commands, configuration data	None
Configuring Network Management	Create or specify master encryption key; create management Users and set their password and privilege level; configure the SNMP agent	Commands and configuration data	Status of commands and configuration data	Master encryption key (read/ write access), Crypto Officer's password for CLI (read/write access)
Configuring the module Platform	Define the platform subsystem software of the module by entering Bootrom Monitor Mode, File System, fault report, message logging, and other platform related commands	Commands and configuration data	Status of commands and configuration data	None
Configuring Hardware Controllers	Define synchronization features for module	Commands and configuration data	Status of commands and configuration data	None
Configuring the Internet Protocol	Set IP functionality	Commands and configuration data	Status of commands and configuration data	None
Configuring Quality of Service (QoS)	Configure QOS values for module	Commands and configuration data	Status of commands and configuration data	None

Table 2-3 Crypto-Officer Services (Continued)

Service	Description	Input	Output	CSP Access
Configuring the VPN	Configure Public Key Infrastructure (PKI); configure the Internet Key Exchange (IKE) Security Protocol; configure the IPSec protocol	Commands and configuration data	Status of commands and configuration data	RSA keys pair (read/write access), Pre-shared key (read/write access)
Configuring DHCP	Configure DHCP on module	Commands and configuration data	Status of commands and configuration data	None
Configuring Security	Define security features for module, including Access List, AAA, and firewall functionality	Commands and configuration data	Status of commands and configuration data	AAA User password (read/write access), RADIUS password (read/ write access)
HTTPS over TLS	Secure browser connection over Transport Layer Security acting as a Crypto Officer service (web management interface).	TLS inputs, commands, and data	TLS outputs, status, and data	RSA key pair for TLS

User Role

The User role can access the switch's IPSec and IKE services. Service descriptions and inputs/outputs are listed in the following table:

Table 2-4 User Service

Service	Description	Input	Output	CSP Access
IKE/IPSec	Access the module's IPSec services in order to secure network traffic	IPSec inputs, commands, and data	IPSec outputs, status, and data	RSA key pair for IKE (read access); Diffie-Hellman key pair for IKE (read and write access); pre-shared keys for IKE (read access)
HTTPS over TLS	Access the module's TLS services in order to secure network traffic	TLS inputs, commands, and data	TLS outputs, status, and data	RSA key pair for TLS
EAP-TLS termination	Provide EAP-TLS termination	EAP-TLS inputs, commands and data	EAP-TLS outputs, status and data	EAP-TLS public key (read) EAP-TLS private key (read)
802.11i Shared Key Mode	Access the module's 802.11i services in order to secure network traffic	802.11i inputs, commands and data	802.11i outputs, status and data	802.11i Pre-Shared Key (read) 802.11i Session key (read/write)
802.11i with EAP-TLS	Access the module's 802.11i services in order to secure network traffic	802.11i inputs, commands and data	802.11i outputs, status, and data	EAP-TLS public key (read) EAP-TLS private key (read) 802.11i Pair-Wise Master Key (read/write) 802.11i Session key (read/write)
Data link (Layer 2) Encryption	Access the module's Layer 2 encrypted tunnel services to secure network traffic	Data link encryption inputs, commands and data	Data link encryption, status, and data	Data link encryption AES key (read)

Authentication Mechanisms

The Aruba 800/5000/6000 Mobility Controller supports role-based authentication. Role-based authentication is performed before the Crypto Officer enters privileged mode using admin password via Web Interface and SSH or by entering enable command and password in console. Role-based authentication is also performed for User authentication.

This includes password and RSA-based authentication mechanisms. The strength of each authentication mechanism is described below.

Table 2-5 Estimated Strength of Authentication Mechanisms

Authentication Type	Role	Strength
Password-based authentication (CLI and Web Interface)	Crypto Officer	Passwords are required to be at least six characters long. Numeric, alphabetic (upper and lowercase), and keyboard and extended characters can be used, which gives a total of 95 characters to choose from. Therefore, the number of potential six-character passwords is 95^6 (735091890625).
RSA-based authentication (IKE)	User	RSA signing and verification is used to authenticate to the module during IKE. This mechanism is as strong as the RSA algorithm using a 1024 bit key pair.
Pre-shared key-based authentication (IKE)	User	Pre-shared keys must be at least six characters long and up to 64 bytes long. Even if only uppercase letters were used without repetition for a six character pre-shared key, the probability of randomly guessing the correct sequence is one in 165,765,600.
Pre-shared key based authentication (802.11i)	User	32-byte (256-bit) PSK key corresponds to 2^{256} potential combinations.
EAP-TLS authentication	User	1024-bit RSA key corresponds to effective strength of 2^{80}

Unauthenticated Services

The Aruba 800/5000/6000 Mobility Controller can perform SNMP management, VLAN, bridging, firewall, routing, and forwarding functionality without authentication. These services do not involve any cryptographic processing.

The SNMPv1 can be used to remotely perform non-security-sensitive monitoring. SNMP uses a clear text community string for authentication. Also, the Bootrom Monitor mode is disabled in FIPS mode by placing a Tamper Evident Label (TEL) over the serial port.

Cryptographic Key Management

Implemented Algorithms

FIPS-approved cryptographic algorithms have been implemented in hardware and software.

Hardware encryption acceleration is provided for bulk cryptographic operations for the following FIPS approved algorithms:

- SHA-1–Byte Oriented (Certificate # 244)
- HMAC SHA-1 (Certificate #118)
- Triple DES–CBC, keying options 1, 2, 3 (Certificate #261)
- AES–CBC, key sizes 128, 192, 256 (Certificate # 159)
- AES-CCM, key size 128 (Certificate #4)
- PKCS #1 (RSA) signature–1024 bits (Certificate #102)

Hardware encryption is provided for the following non-FIPS-approved algorithm.

- MD5
- RC4

The software implementation is done using OpenSSL crypto library version 0.9.7f. The software implements the following FIPS-approved algorithms:

- SHA-1–Byte Oriented (Certificate #386)
- HMAC SHA-1 (Certificate #116)
- DES–CBC (Certificate #262, transitional phase only, valid until May 19, 2007)—for legacy use only
- Triple DES–CBC, keying options 1, 2, 3 (Certificate #382)
- AES–CBC, key sizes 128, 192, 256 (Certificate # 315)
- PKCS #1 (RSA) signature–1024 bits (Certificate #101)
- PRNG (ANSI X9.31)–64 bits (Certificate # 135)

OpenSSL v0.9.f is also used to implements the following non-FIPS-approved algorithms in the switch software:

- MD5

- RC4
- Diffie-Hellman (allowed for key agreement)

  Diffie-Hellman key establishment methodology provides 80-bits of encryption strength. Note: Only 1024 bit Diffie-Hellman keys can be used in FIPS mode.

Critical Security Parameters

The following are the Critical Security Parameters (CSPs) used in the switch.

Table 2-6 CSPs Used in Aruba 800/5000/6000 Mobility Controller

CSPs	CSPs type	Generation	Storage and Zeroization	Use
Key Encryption Key (KEK)	TDES key	Hard Coded	Stored in Flash.	Encrypts IKE, pre-shared keys, and database file
Pre-shared keys	64 character pre-shared key	External	Stored encrypted in Flash with the KEK. Zeroized by changing (updating) the pre-shared key through the User interface.	User and module authentication during IKE
IPSec session keys	56-bit DES, 168-bit TDES, or 128/192/256-bit AES keys; HMAC SHA-1 key	Established during the Diffie-Hellman key agreement	Stored in plaintext in volatile memory. Zeroized when the session is closed.	Secure IPSec traffic
IKE Diffie-Hellman private key	768/1024-bit Diffie-Hellman private key. Note: Key size 768 bits is not allowed in FIPS mode.	Generated internally during IKE negotiations	Stored in the volatile memory. Zeroized after the session is closed.	Used in establishing the session key for an IPSec session
IKE Diffie-Hellman public key	768/1024-bit Diffie-Hellman public key	Generated internally during IKE negotiations	Stored in plaintext in memory.	Key agreement during IKE
SSH session keys	168-bit TDES or 128/192/256-bit AES keys; HMAC SHA-1 keys	Established during the SSH key exchange using the Diffie-Hellman key agreement	Stored in plaintext in volatile memory. Zeroized when the session is closed.	Secure SSH traffic

Table 2-6 CSPs Used in Aruba 800/5000/6000 Mobility Controller

CSPs	CSPs type	Generation	Storage and Zeroization	Use
SSH Diffie-Hellman Public Key	768/1024-bit Diffie-Hellman private key	Generated internally during the SSH session negotiations	Stored in the volatile memory. Zeroized after the session is closed.	Used in establishing the session key for an SSH session.
SSH Diffie-Hellman Private Key	768/1024-bit Diffie-Hellman public key	Generated internally during the SSH session negotiations	Stored in the volatile memory. Zeroized after the session is closed.	Used in establishing the session key for an SSH session.
TLS session key	AES 128, 192, 256	Generated in the module	Stored in plaintext in volatile memory. Zeroized when the session is closed.	Key agreement during 802.1x connection
TLS session key	RC4	Generated in the module. This is not a FIPS approved mechanism and is not considered a CSP. The information is given here for sake of completeness.	Stored in plaintext in volatile memory. Zeroized when the session is closed.	Key agreement during 802.1x connection
RSA Public Key	RSA 1024 bit key	External	Stored in flash memory encrypted with KEK	Used by TLS and EAP-TLS protocols during the handshake
RSA Private Key	RSA 1024 bit key	External	Stored in flash memory encrypted with KEK	Used by TLS and EAP-TLS protocols during the handshake
802.11i Pre-Shared Key (PSK)	802.11i pre-shared secret key (256-bit)	External	Stored in flash memory encrypted with KEK	Used by the 802.11i protocol
802.11i Pair-Wise Master key (PMK)	802.11i secret key (256-bit)	Derived during the EAP-TLS handshake	Stored in the volatile memory. Zeroized on reboot.	Used by the 802.11i protocol

Table 2-6 CSPs Used in Aruba 800/5000/6000 Mobility Controller

CSPs	CSPs type	Generation	Storage and Zeroization	Use
802.11i session key	AES-CCM key (128 bit)	Derived from 802.11 PSK	Stored in plaintext in volatile memory. Zeroized on reboot	Used for 802.11i encryption
Data link (Layer 2) encryption key	AES key (128/256 bit)	Derived during the EAP-TLS handshake	Stored in plaintext in volatile memory. Zeroized on reboot	Used to encrypt Layer 2 tunneling frames
Passwords	6-character password	External	Stored encrypted in Flash with KEK. Zeroized by either deleting the password configuration file or by overwriting the password with a new one.	Authenticatio n for accessing the management interfaces, RADIUS authentication
PRNG seeds	Seed key (24 bytes, TDES 2-keying option) and seed (8 bytes)	Predetermined values	In volatile memory only. Zeroized on reboot.	Seed PRNGs

Encryption Keys and Passwords

- PRNG–The switch implements the PRNG specified in ANSI X9.31, A.2.4 in software. All keys are generated using this implementation.
- Key Encryption Key (KEK)–The KEK is hard-coded in the image. The KEK encrypts IKE RSA keys pairs, pre-shared keys, and User database. KEK can be zeroized by erasing the image.
- IKE RSA

  The IKE RSA key pair is used for IKE authentication and is generated externally while enrolling a certificate for the switch with the specified Certificate Authority (CA). The RSA key pair can only be generated after declaring the CA the switch should use (by executing certain CA Identity Mode commands). After declaring the CA to be used, the Crypto Officer can enter command to generate the keys pair. After the key pair is generated, the certificate request is sent to the chosen CA, who will sign the certificate containing the public key.

  The private key is stored encrypted in flash memory, encrypted with the encryption key. The key pair can be zeroized by overwriting the current one or wiping the flash memory.
- IKE User RSA

The IKE User RSA public key is used for User authentication. During IKE the User sends the switch its digital certificate, which is verified by the switch. The certificate is stored encrypted with the encryption key. The User public key can be zeroized by overwriting it by replacing it with a new key or by erasing the flash memory.

Pre-shared keys can be used instead of certificates during IKE authentication. The pre-shared key must be entered by the Crypto Officer with the Username being the IP address and the password being the pre-shared key. The pre-shared keys are stored encrypted in flash memory and can be zeroized by either overwriting them with new ones or by erasing the flash memory.

- IKE Diffie-Hellman–The IKE Diffie-Hellman key pairs are generated during IKE for use for the key establishment during IKE. The key pairs are generated internally and are ephemeral key pairs that are stored in plaintext in memory. The key pairs can be zeroized by rebooting the switch.
- SSH Diffie-Hellman–The SSH Diffie-Hellman key pair is generated internally and is used during the SSH key establishment. This key pair is an ephemeral key pair and is stored in plaintext in volatile memory. It can be zeroized by rebooting the switch.
- RSA key pair –The RSA key pair is used by TLS and EAP-TLS protocols. It is externally generated and stored in flash memory encrypted with KEK.
- 802.11i Pre-Shared Key (PSK) is a pre-shared key which is used to derive session keys for the 802.11i wireless security protocol. The key is stored in flash memory encrypted with KEK.
- 802.11i Pair-Wise Master Key (PMK) is established during the EAP-TLS handshake and is used to derive session keys for the 802.11i wireless security protocol. The key is stored in volatile memory in plaintext. It can be zeroized by rebooting the switch.
- 802.11i AES-CCM session key is used to encrypt 802.11i communications and is derived from the PSK using the key derivation function specified in the IEEE 802.11i standard. The key is stored in volatile memory in plaintext and is zeroized on reboot.
- Data link (Layer 2) encryption key is established during the EAP-TLS handshake and is used to encrypt Layer 2 tunneling frames. It is stored in volatile memory in plaintext. It can be zeroized by rebooting the switch.
- Session Keys–The TLS, SSH and IPSec session keys are used to secure TLS, SSH and IPSec traffic respectively by providing confidentiality (DES, Triple-DES, and AES) and integrity (HMAC SHA-1). SSH and IPSec secrets are established using the Diffie-Hellman key agreement. The TLS, SSH and IPSec session keys are ephemeral keys and are stored in plaintext in memory. They can be zeroized by rebooting the module.
- Software Integrity–The software integrity test is done using a CRC-32 test.
- Passwords

Passwords are used for authentication. The Crypto Officer will not be able to access the CLI management interface until authenticated successfully. Passwords are also used to remotely authenticate Users during RADIUS. Also, passwords must be at least six characters long.

All passwords are stored encrypted (database files are encrypted with the encryption key) in flash memory, except for the Crypto Officer passwords. Crypto Officer password is stored encrypted in the configuration file.

All passwords can be zeroized by overwriting them with new ones or erasing the flash memory.

Self-Tests

The Aruba 800/5000/6000 Mobility Controller performs both power-up and conditional self-tests. In the event any self-test fails, the switch will enter an error state, log the error, and reboot automatically.

The switch performs the following power-up self-tests:

- Software Integrity Test–The switch checks the integrity of its software using an error detection code. The CRC-32 checksum is used to verify that the operational image and the boot image have not been modified.
- Cryptographic Algorithm Tests–These tests are run at power-up for the DES encryption/decryption, Triple-DES encryption/decryption, AES and AES-CCM encryption/decryption, HMAC SHA-1 calculation/verification, RSA signing/verifying, and the PRNG random data generation.
- RSA Pair-wise Consistency Test (sign/verify)–The RSA pair-wise consistency test takes a RSA private key and signs the hash of some data. The resulting signed data is compared to the hashed data before it was signed. If the two values are equal, then the test fails. If the two values differ, the public key is used to verify the signed data and the resulting value is compared to the original hashed data. If the two values are not equal the test fails.
- RSA Pair-wise Consistency Test (encrypt/decrypt) - The RSA pair-wise consistency test takes a RSA private key and encrypts some data. The resulting cipher is compared to the hashed data before it was encrypted. If the two values are equal, then the test fails. If the two values differ, the public key is used to decrypt the cipher and the resulting value is compared to the original plaintext. If the two values are not equal the test fails.
- Bypass Mode Test–The switch performs a SHA-1 hash value verification to ensure that the firewall policies have not been modified.

Following Conditional Self-tests are performed in the switch:

- Continuous Random Number Generator Test–This test is run upon generation of random data by the switch's random number generators to detect failure to a constant value.
- Bypass Mode Test–The switch performs a SHA-1 check value verification to ensure that the firewall policies have not been modified.

Self-test results are logged in a log file. Upon successful completion of the power-up self tests, the module logs a KATS: passed message into a log file. Confirm the file update by checking the associated time of the file. The status can be view by using the show log crypto all CLI command.

In the event of a hardware KATs failure, the log file records:

```
HW Crypto POST: FAILEDSibyte HW Crypto Failed[Date]@[Time]
The POST Test failed!!!!

Rebooting…
```

In the event of a software tests failure, the log file records:

```
SW Crypto POST: FAILEDSibyte HW Crypto Failed[Date]@[Time]
The POST Test failed!!!!

Rebooting…
```

Mitigation of Other Attacks

ArubaOS includes two modules that provide protection from attacks. These are:

- XSec
- Wireless Intrusion Protection

XSec

xSec is a highly secure data link layer (Layer 2) protocol that provides a unified framework for securing all wired and wireless connections using strong encryption and authentication. xSec provides greater security than other Layer 2 encryption technologies through the use of longer keys, FIPS (Federal Information Processing Standard)–validated encryption algorithms (AES-CBC-256 with HMAC-SHA1), and the encryption of Layer 2 header information including MAC addresses. xSec was jointly developed by Aruba Networks and Funk Software.

The Need for Layer 2 Encryption

Traditionally, encryption has been performed at Layer 3 (Network Layer) in the form of IPSec. IPSec uses 3DES or AES encryption and can encrypt the IP packet including the source and destination IP addresses in the header.

IPSec provides a commonly accepted, secure method of communication over untrusted networks since the only information left unencrypted are packet headers and pure Layer 2 traffic such as ARP (Address Resolution Protocol) and DHCP (Dynamic Host Configuration Protocol) packets.

While the confidentiality of IPSec-encrypted data is not in question, the possibility exists that an attacker with direct link-layer access to other devices on a network could carry out attacks against those devices. For example, a wireless network secured with WEP and IPSec could have client devices at risk if an attacker obtains the WEP key and gains Layer 2 access to the network. In addition, there is

concern among many security groups that exposure of any packet header information could disclose information that an attacker could use as the basis of an attack.

For this reason, many government agencies and commercial entities that transmit highly sensitive information over wireless networks mandate that strong Layer 2 encryption technologies be deployed to ensure absolute data privacy. U.S. DoD Directive 8100.2 requires that all data transmitted using commercial wireless devices be encrypted at Layer 2 or Layer 3. The U.S. Navy and Army are requiring Layer 2 encryption, and cryptographic engines used for all sensitive government communications must be validated as meeting FIPS 140-2 requirements.

xSec has been designed to address this requirement and provide a number of additional benefits.

A Unified Security Framework

xSec enables universal authentication and encryption regardless of access method. Every client that connects to the network, wired or wireless, can authenticate to an Aruba mobility controller using an xSec client. Authentication inside the xSec protocol is accomplished using standard 802.1x EAP (Extensible Authentication Protocol) and utilizes a standard RADIUS server to validate credentials. xSec supports authentication using passwords, certificates, smart cards, token cards, and other credentials supported by the chosen EAP type.

FIPS 140-2 Validation

Through the use of AES-CBC with a 256-bit key length for encryption, xSec provides the only COTS (Commercial Off-the-Shelf) Layer 2 protocol that is FIPS 140-2 validated. As a result, xSec is an ideal solution for security-sensitive applications in the government, finance, and healthcare markets. FIPS 140-2 is a more stringent security standard than those required in the commercial sector, assuring compliance with commercial regulations such as HIPAA and GLBA.

Legacy Investment Protection

Most legacy equipment cannot be upgraded to support the latest security standards such as 802.11i and WPA2. xSec encryption, however, is performed in hardware by the Aruba mobility controller, and in software at the client level. This means that an existing network can be upgraded to support the latest security technology without the need to replace older access points or wireless NICs (network interface cards).

Designed for Compatibility

xSec is based on the IEEE security standard 802.1x. Secure EAP methods supported include EAP-TLS, TTLS and PEAP, allowing compatibility with existing security mechanisms such as RSA Tokens and PKI certificates. xSec is designed to be transparent to the Layer 2 infrastructure and can operate through a

switched Ethernet network without the risk of EAP frames being intercepted by 802.1x-aware Ethernet switches. Funk Software's Odyssey Client with xSec support is available for Windows 2000 and Windows XP.

Wireless Intrusion Detection

Aruba's Wireless Intrusion Protection (WIP) module eliminates the need for a separate system of RF sensors and security appliances. The WIP module provides extraordinary capabilities to Aruba's enterprise mobility system, giving administrators visibility into the network, along with the power to thwart malicious wireless attacks, impersonations and unauthorized intrusions.

Wireless intrusion detection is only the first step in securing the corporate environment from unwanted wireless access. Without adequate measures to quickly shut down intrusions, detection is almost worthless. Without accurate classification of APs and stations (e.g., valid, rogue, or neighbor), providing an automated response to possible intrusion is impossible.

Aruba access points constantly scan all channels of the RF spectrum, capturing all 802.11 traffic and locally examining the captured data. Only policy violations are sent to the central mobility controller to ensure minimal impact on wired network performance. While scanning the environment, the Aruba system learns about all wireless APs and stations and classifies these devices based on traffic flows seen on the wire and in the air. This traffic is collected and correlated on the mobility controller.

Aruba's WIP module provides both detection and prevention capabilities. Users and devices are detected and classified so administrators can react to both unintentional and malicious WLAN access. No other system on the market provides such capabilities.

Unique Station and User Classification

Aruba's patent-pending classification system automatically identifies and classifies all APs and stations connected to the network. The system works by comparing traffic seen in the air with traffic seen on the wire. When a match is found, it is known with certainty that the device belongs to the local network rather than a neighboring network. This avoids false alarms for the administrator, because only true rogue devices are classified as such.

Detecting and Disabling Rogue APs

Aruba's classification algorithms allow the system to accurately determine who is a threat and who is not. Once classified as rogue, these APs can be automatically disabled. Administrators are also notified of the presence of rogue devices, along with their precise physical location on a floorplan, so that they may be removed from the network.

Denial of Service and Impersonation Protection

Wireless networks, by their nature, make an attractive target for denial of service attacks. Such attacks include software that floods the network with association requests, attacks that make a laptop look like thousands of APs, and deauthentication floods. Aruba mobility controllers equipped with the Aruba WIP module maintain signatures of many different wireless attacks and are able to block them so service is not disrupted.

Advanced Denial of Service (DoS) protection keeps enterprises safe against a variety of wireless attacks, including association and de- authentication floods, honeypots and AP and station impersonations. Based on location signatures and client classification, Aruba access points will drop illegal requests and generate alerts to notify administrators of the attack.

Man-in-the-Middle Protection

One of the common attacks possible in wireless networks is the "man-in-the-middle" attack. During a man-in-the-middle attack, a hacker masquerades as a legitimate AP. Then, acting as a relay point, this man-in-the-middle fools users and other APs into sending data through the unauthorized device. An attacker can then modify or corrupt data or conduct password-cracking routines.

Aruba access points monitor the air to detect other wireless stations masquerading as valid APs. When such masquerading is detected, appropriate defense mechanisms are put into place. Aruba mobility controllers also track unique "signatures" for each wireless client in the network. If a new station is introduced claiming to be a particular client, but without the proper signature, a station impersonation attack is detected.

Policy Definition and Enforcement

Aruba WIP provides a number of policies that can be configured to take automatic action when a policy is violated. Examples of wireless policies include weak WEP implementation detection, AP misconfiguration protection, ad-hoc network detection and protection, unauthorized NIC type detection, wireless bridge detection and more.

Using Wireless to Protect your Wired Network

Even if wireless LANs are not sanctioned at this time, no security conscious company can afford to do nothing. Aruba's WIP will keep wireless traffic from working its way into the wired network through rogue APs unknowingly attached to a network port. With Aruba's mobility system equipped with WIP, the enterprise network is protected against wireless security holes. And when the enterprise is ready to deploy wireless LANs, the Aruba system can be easily reconfigured to provide a scalable and secure wireless LAN infrastructure.

Using Wireless to Protect your Existing Wireless Network

Aruba's mobility system with WIP delivers the detection and protection necessary to keep your existing wireless network safe from undesirable wireless access. ArubaOS WIP complements and enhances any existing WLAN deployment, including Cisco deployments, by providing advanced RF security and control features not found in first-generation wireless products.

Installing the Switch 3

This chapter covers the physical installation of the Aruba 800/5000/6000 Mobility Controller with FIPS 140-2 Level 2 validation. The Crypto Officer is responsible for ensuring that the following procedures are used to place the switch in a FIPS-approved mode of operation.

This chapter covers the following installation topics:

- Precautions to be observed during installation
- Requirements for the switch components and rack mounting gear
- Selecting a proper environment for the switch
- Mounting the switch in a rack
- Connecting power to the switch

Pre-Installation Checklist

You will need the following during installation:

- ☐ Aruba 800, 5000 and 6000 Mobility Controller components
- ☐ Aruba 800, 5000 and 6000 rack mounting kit (see "Rack Mounting Kit" on page 39)
- ☐ Phillips or cross-head screwdriver
- ☐ 19-inch equipment rack, or equivalent
- ☐ 3U rack space for the Aruba 5000/6000 and 1U rack space for the Aruba 800-series with 10 cm (4 inches) clearance to the left, right, front, and rear of the rack
- ☐ Another person to help position the switch
- ☐ Aruba power cord for each power supply, rated to at least 10 A with IEC320 connector
- ☐ Adequate power supplies and electrical power
- ☐ Cool, non-condensing air 0 to 40 °C (32 to 104 °F). May require air conditioning.
- ☐ Management Station (PC) with 10/100 Mbps Ethernet port and SSH software.
- ☐ A 4- or 8-conductor Category 5 UTP Ethernet cable

Precautions

Caution:	Installation should be performed only by a trained technician. Dangerous voltage in excess of 240VAC is always present while the Aruba Power Supply Module is plugged into an electrical outlet. Remove all rings, jewelry, and other potentially conductive material before working with this product. Never insert foreign objects into the chassis, the power supply, or any other component, even when the power supplies have been turned off, unplugged, or removed. Main power is fully disconnected from the switch only by unplugging all installed power supplies' power cords from their power outlets. For safety reasons, make sure the power outlets and plugs are within easy reach of the operator. Do not handle electrical cables which are not insulated. This includes any network cables. To minimize electrical hazard, keep water and other fluids away from the product. Comply with electrical grounding standards during all phases of installation and operation of the product. Do not allow the switch chassis, network ports, power supplies, or mounting brackets to contact any device, cable, object, or person attached to a different electrical ground. Also, never connect the device to external storm grounding sources. Installation or removal of the chassis or any module must be performed in a static-free environment. The proper use of anti-static body straps and mats is strongly recommended. Modules must be kept in anti-static packaging when not installed in the chassis. Do not ship or store this product near strong electromagnetic, electrostatic, magnetic or radioactive fields. Do not disassemble the chassis or any module. They have no internal User-serviceable parts. When service or repair is needed, contact Aruba Wireless Networks.

The Security Kit

The Aruba 800/5000/6000 Mobility Controller FIPS 140-2 Level 2 Security Kit modifies the standard Aruba 800/5000/6000 Mobility Controller hardware, software, and documentation to assure FIPS 140-2 Level 2 validation.

Product Examination

The Crypto Officer receives the switch in a carton. The Crypto Officer should examine the carton for evidence of tampering. Tamper-evidence includes tears, scratches, and other irregularities in the packaging.

Package Contents

The product carton should include the following:

- Aruba 800/5000/6000 Mobility Controller
- Rack mounting kit
- Aruba User Documentation CD
- Tamper-Evident Labels
- Assorted documentation including the *Aruba 800/5000/6000 Mobility Controller FIPS 140-2 Level 2 Release Supplement* (this document) covering the product Security Policy.

Minimum Switch Configuration for the Aruba 6000

The Aruba 5000/6000 Mobility Controller must include the following basic components (as shown in Figure 1-1 on page 4):

- One modular switch chassis
- One fan tray
- One Supervisor Card in Slot 1/0
- One Line Card in Slot 0/0
- Power Supply

Note: The number and type of power supplies required depends on the number and type of line cards installed in the chassis (refer to the *Aruba 5000/6000 Mobility Controller Installation Guide*).

The switch is shipped with all required modules installed.

Additional Modules for the Aruba 6000

Additional modules are available for expanding the Aruba 5000/6000 Mobility Controller or as replacements. Only the following modules should be used with the switch in a FIPS-approved mode:

TABLE 3-1 FIPS-Approved Components

Component Name	Model Number
Aruba 5000/6000 Mobility Controller chassis (with security kit)	HW-CHASF (3300028 Rev. 01)
Aruba 5000/6000 Mobility Controller Fan tray (with security kit)	HW-FTF (3300031 Rev. 01)
Aruba 6000 Mobility Controller Supervisor Card II (256 AP support)	SC-256-C2 (3300027 Rev. 01)
Aruba 5000 Mobility Controller Supervisor Card I (48 AP support)	SC-48-C1 (3300025-01)
Aruba 5000 Mobility Controller Supervisor Card I (128 AP support)	SC-128-C1 (3300025-01)
Aruba 5000/6000 Mobility Controller Line Card	LC-2G24F (3300026 Rev. 01)
Aruba 5000/6000 Mobility Controller Line Card 2GE	LC-2G (3300029-01)
Aruba 5000/6000 Mobility Controller SPOE Line Card	LC-2G24FP (3300024 Rev. 01)
Aruba 5000/6000 Mobility Controller Power Supply 200W	HW-PSU-200 (HW-PSU-200)
Aruba 5000/6000 Mobility Controller Power Supply 400W	HW-PSU-400 (HW-PSU-400)

If you have received replacement or expansion modules separately from the chassis, refer to the *Aruba 5000/6000 Mobility Controller Installation Guide* for instructions on installing each module.

Note: By adding modules, you are increasing the switch's total power load. Depending on the modules installed, you may be required to add power supplies to the switch and/or increase the capacity of your site's electrical systems. For details, refer to the *Aruba 5000/6000 Mobility Controller Installation Guide*.

Selecting a Location

The Aruba 800/5000/6000 Mobility Controller, like other network and computing devices, requires an “electronics friendly environment. The Crypto Officer should select a location to mount the switch where the switch is assured of the following considerations:

- Reliable power

  Make sure that your electrical outlet is compatible with the switch power supplies.

  The power supplies HW-PSU-200 rated at 200 W total and HW-PSU-400 rated at 400 W total are auto-ranging to accept 85 to 264 VAC, at 50 to 60 Hz.

  The power cords must be rated to 10 A and conform to grounded electrical standards in the country where the product is operated.

  Use of a power line conditioner or Uninterruptable Power Supply (UPS) can decrease or mitigate problems caused by power service fluctuations. Make sure that the output of any power shaping device is compatible with the switch power supplies.

Note: Up to three HW-PSU-400 power supplies can be installed in any power supply bay on the Aruba 5000/6000 Mobility Controller.

A maximum of two HW-PSU-200 power supplies can be installed in the Aruba 5000/6000 Mobility Controller. Because of the chassis design, these power supplies cannot be installed next to each other. If two of these power supplies are being installed, they must be located in the two outside bays, leaving the middle bay unpopulated.

To maintain proper ventilation as well as physical security, install a blanking panel (included) to cover the vacant bay.

- Cool, non-condensing ventilation

  For proper operation, the switch requires a controlled environment with a regulated nominal temperature range between 10 and 35 °C (52 to 95 °F). Humidity must be kept at non-condensing levels between 5 and 95%.

  Where a large number of electrical devices are working in the same area, additional air conditioning or air circulation equipment may be required.

- Ample space

  For proper air circulation, leave at least 10 cm (4 inches) clearance for the vents on the left, right, front, and rear of the chassis.

  Leave additional space in front of the chassis to access power cords, network cables, and indicator LEDs.

- Limited electromagnetic interference

  For best operation, keep the switch and all cords and cables at least 0.7 meters (2 feet) from fluorescent lighting fixtures, and 2 meters (6 feet) from photocopiers, radio transmitters, electric generators, and other sources of strong electromagnetic interference.

Rack Mounting Kit

Using the included rack mounting kit, the switch can be mounted in a standard 19-inch network equipment rack. The rack mounting kit contains the following parts:

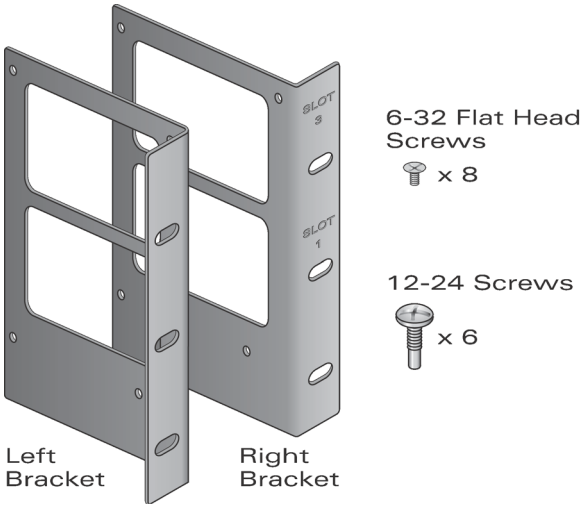

Figure 3-1 Aruba 5000/6000 Rack Mounting Kit

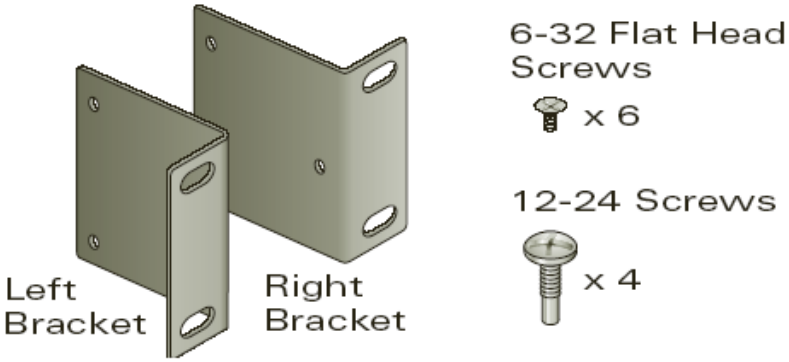

Figure 3-2 Aruba 800-series Rack Mounting Kit

Note: The 12-24 screws are intended for securing the switch to the rack. Some racks require different screws which are not included. Make sure that you have the correct screws or fasteners for your rack system before attempting to mount the switch.

Mounting the Chassis

Step 1 Make sure that your rack environment meets requirements (see "Selecting a Location" on page 38).

1. Attach the rack mounting brackets to the switch chassis as shown below

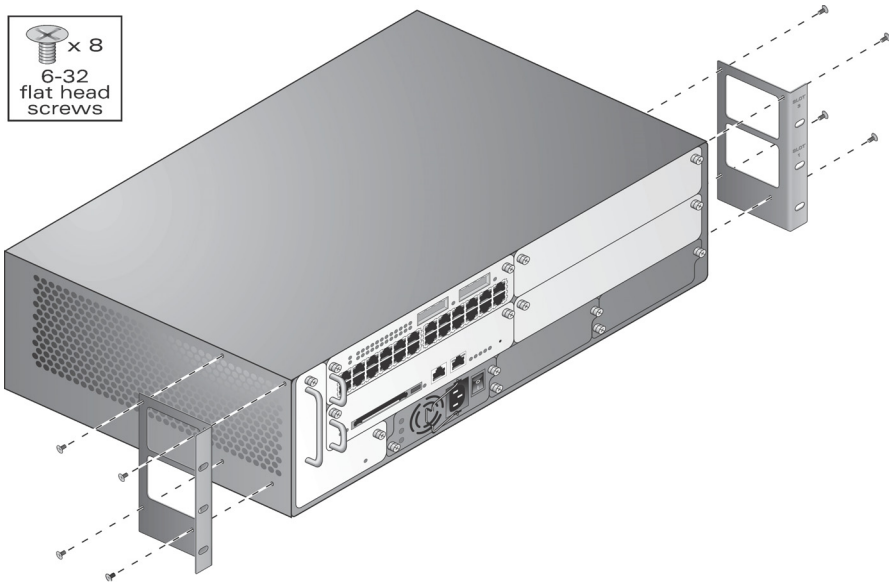

Figure 3-3 Attaching the Rack Mounting Brackets to Aruba 6000

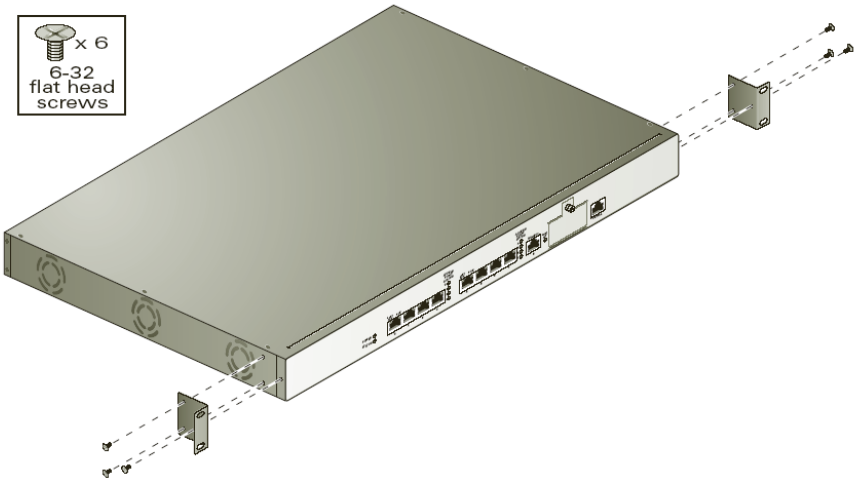

Figure 3-4 Attaching the Rack Mounting Brackets to the Aruba 800-series Chassis

The bracket stamped with slot numbers is for the right-hand side of the switch. Orient both brackets so that the narrow flange faces the front. When placed properly, the brackets' large rectangular voids will be positioned over the side vents to allow proper air flow during operation.

Use a Phillips or cross-head screwdriver to attach each bracket securely with four 6-32 flat head screws (included).

2. Attach the switch to the rack.

Caution: To avoid personal injury or damage to equipment, get help for lifting and positioning the switch. Also, do not install the switch in any fashion where instability or uneven mechanical loading may occur.

Note: For proper operation, the switch requires an ambient air temperature between 0 and 40 °C (32 to 104 °F). Make sure your rack environment is in compliance.

Position the switch chassis in the equipment rack and align the brackets' mounting holes with the corresponding holes in your rack frame.

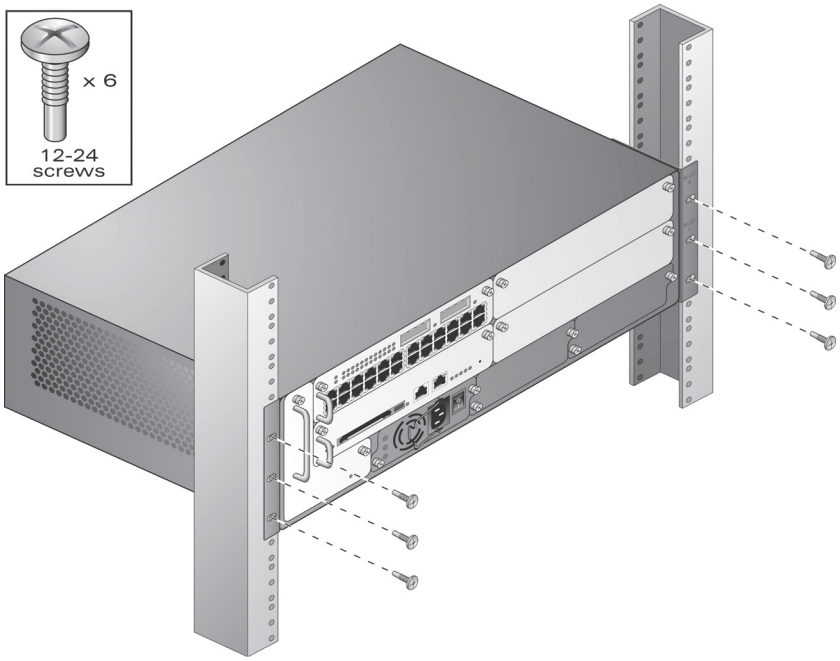

Figure 3-5 Mounting the Aruba 5000/6000 Mobility Controller

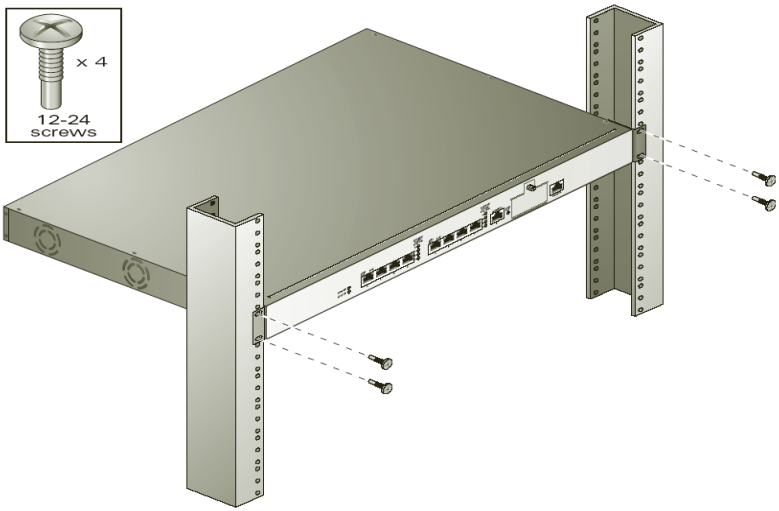

Figure 3-6 Mounting the Aruba 800-series Mobility Controller

Use a Phillips or cross-head screwdriver to secure the switch to the rack with 12-24 screws (included) for each mounting bracket.

Note: Some cabinets require different screws which are not included. Make sure that you use the correct screws or fasteners for your rack system.

Connecting Power

Caution: This procedure should be performed only by a trained technician.

Step 1 Make sure you understand the procedure and all precautions.

Before beginning, read the entire procedure. Make sure you understand all the precautions in these steps as well as those on page 35.

3. Make sure that the installed power supplies can handle the switch's power load.

4. Make sure that your site's electrical systems can handle the switch's power load.

   Depending on the switch's total power load, you may be required to increase the capacity of your site's electrical systems. For details, refer to the *Aruba 5000/6000 Mobility Controller Installation Guide and Aruba 800-series Mobility Controller Installation Guide*

Note: Use of a power line conditioner or Uninterruptable Power Supply (UPS) can decrease or mitigate problems caused by power service fluctuations. Make sure that the output of any power shaping device is compatible with the switch power supplies.

5. Make sure the power switch on the power supply is in the Off (**O**) position.

Caution: Never attach a power cord to a power supply while its power switch is in the On (I) position. Make sure the power switch is Off (**O**) first.

6. Attach the power cord to the power supply.

   Plug an appropriate power cord into the power input socket. The socket accepts a power cord with a standard IEC320 plug.

Caution: For proper safety and performance, the power cord must be rated to 10 A and conform to grounded electrical standards in the country where the product is operated.

Note: Swing the cord retaining clip to the left before attaching the power cord.

7. Secure the power cord.

When the power cord is attached, swing the power cord retaining clip to the right as shown in Figure 3-7. This will hold the plug in place and help prevent it from being removed accidentally.

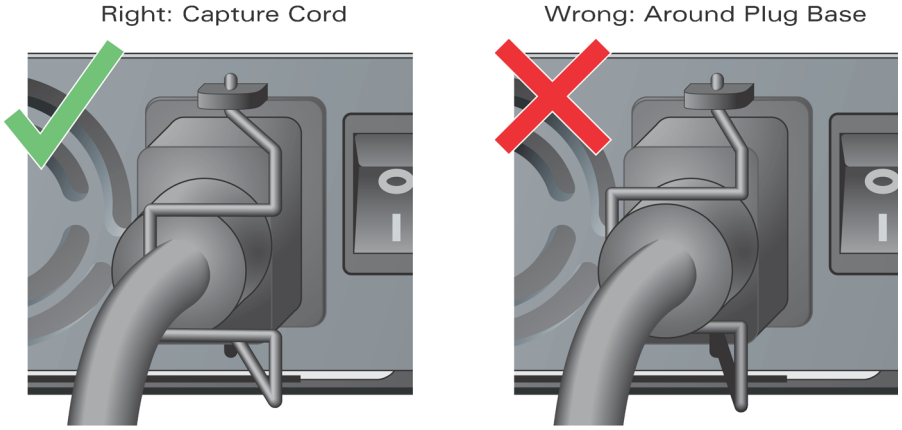

Figure 3-7 Using the Power Cord Retaining Clip

8. Attach the power cord to a proper electrical outlet.

Caution: For safety reasons, make sure the power outlets and plugs are within easy reach of the operator and can be quickly disconnected if necessary.

Repeat Step 4 through Step 7 for each installed power supply.

Once power is connected, you can perform the power-on test.

Power-On Test

Once the switch is physically installed, the Crypto Officer should run the power-on test.

9. Turn on all installed power supplies in quick succession.

For each power supply, place the power switch in the on (I) position.

Note: To avoid overloading the first power supplies to be turned on while using line cards that provide Power Over Ethernet to attached devices, all required power supplies should be turned on at roughly the same time (within about three seconds).

10. Check for the proper power indicators.

Immediately upon power up, you should observe the following:

- For the Aruba 5000/6000 all power supply AC OK and DC OK LEDs light solid green

- For the Aruba 5000/6000 the fan tray Fan Status LED lights solid green and you should be able to feel significant airflow blowing from the chassis vents at each of the three fan positions
- For the Aruba 5000/6000 the line card Power LED lights solid green
- For the Aruba 5000/6000 the supervisor card Power LED lights solid green
- For the Aruba 5000/6000 the supervisor card utilization LEDs begin blinking sequentially from left to right and then right to left
- For the Aruba 800-series the system Power LED lights solid green
- For the Aruba 800-series the system Status LED is initially off

11. Connect a management station to a network port on the switch.

Connect one end of a 4- or 8-conductor Category 5 UTP Ethernet cable to your management PC or laptop FE port. Attach the other end of the cable to one of the FE ports.

Note: For the Aruba 5000/6000 the FE management port on the Supervisor Card cannot be used for the initial power-on test.

12. Initiate an SSH connection to the switch.

From the management station, connect to the switch's default management IP address, 192.168.100.1. Once the connection is established, the switch will prompt for a User log in:

```
(aruba)
User: _
```

When the User prompt appears, the switch has successfully booted.

13. Check for the appropriate operation indicators.

Once the system has successfully booted, you should observe the following:

- For the Aruba 800-series the system Power LED is still lit solid green
- For the Aruba 800-series The system Status LED is solid green
- For the Aruba 5000/6000 the power supply AC OK and DC OK LEDs are still lit solid green
- For the Aruba 5000/6000 the fan tray Fan Status LED is still solid green
- For the Aruba 5000/6000 One the line card:
  - The Power LED is still solid green
  - The Status LED lights solid green
- For the Aruba 5000/6000 on the supervisor card:
  - The power LED is still solid green

- The Status and Active/Standby LEDs are solid green
- The Utilization LED panel reflects the expected level of usage.

  In a typical power-on test performed after initial installation, a single blinking LED will indicate utilization of under 1%.

  Once the Switch name has passed the initial power-up test, attach the Tamper-Evident Labels (TELs) as described below.

Tamper-Evident Labels

After testing, the Crypto Officer must apply Tamper-Evident Labels (TELs) to the switch. When applied properly, the TELs allow the Crypto Officer to detect the opening of the chassis cover, the removal or replacement of modules or cover plates, or physical access to restricted ports. Vendor provides **FIPS 140** designated TELs which have met the physical security testing requirements for tamper evident labels under the FIPS 140-2 Standard. TELs are not endorsed by the Cryptographic Module Validation Program (CMVP).

Reading TELs

Once applied, the TELs included with the switch cannot be surreptitiously broken, removed, or reapplied without an obvious change in appearance:

Figure 3-8 Tamper-Evident Labels

Each TELs also has a unique serial number to prevent replacement with similar labels.

Required TEL Locations

The Aruba 5000/6000 Mobility Controller requires a minimum of 12 TELs to be applied as follows:

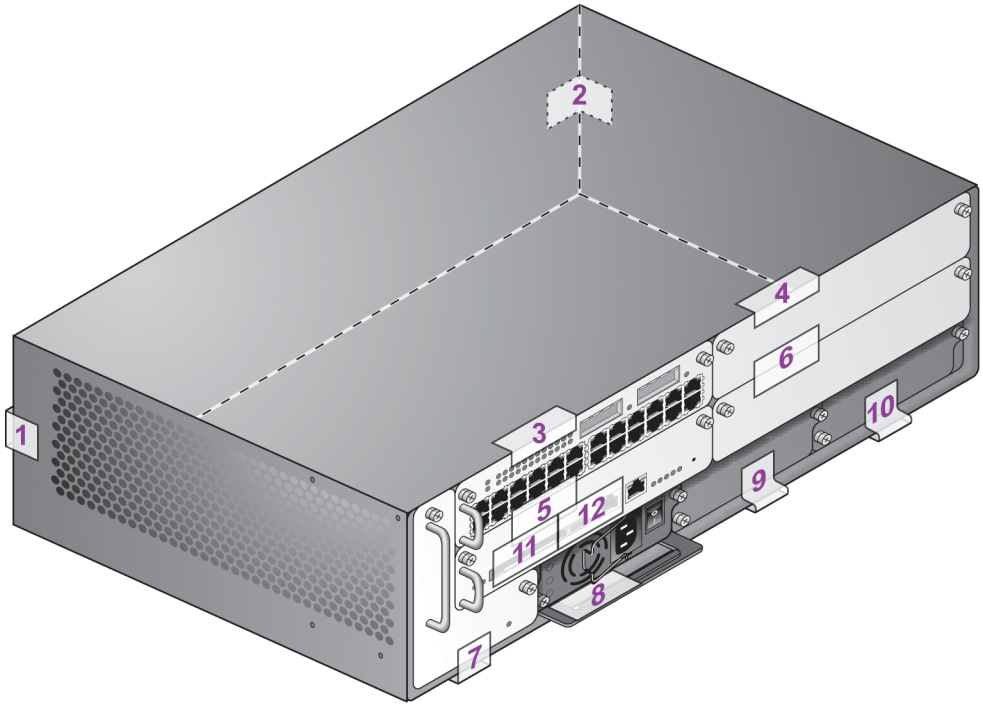

Figure 3-9 Required TELs for the Aruba 5000/6000 Mobility Controller

To Detect Opening the Chassis Cover

1. Spanning the left side and rear of the chassis
2. Spanning the right side and rear of the chassis

To Detect the Removal of Any Module or Cover Plate

3. Spanning the Slot 0/0 Line Card faceplate and the top of the chassis
4. Spanning the Slot 0/1 Line Card (or blank) faceplate and the top of the chassis
5. Spanning the Slot 1/0 Supervisor Card faceplate and the Slot 0/0 faceplate
6. Spanning the Slot 1/1 Line Card (or blank) faceplate and the Slot 0/1 faceplate
7. Spanning the fan tray faceplate and the bottom of the chassis
8. Spanning the PS1 handle (or blank faceplate) and the bottom of the chassis
9. Spanning the PS2 handle (or blank faceplate) and the bottom of the chassis

10. Spanning the PS3 handle (or blank faceplate) and the bottom of the chassis

To Detect Access to Restricted Ports

11. Spanning the PCMCIA slot on the Supervisor Card

12. Spanning the Serial port on the Supervisor Card

The Aruba 800-series Mobility Controller requires a minimum of 3TELs to be applied as follows:

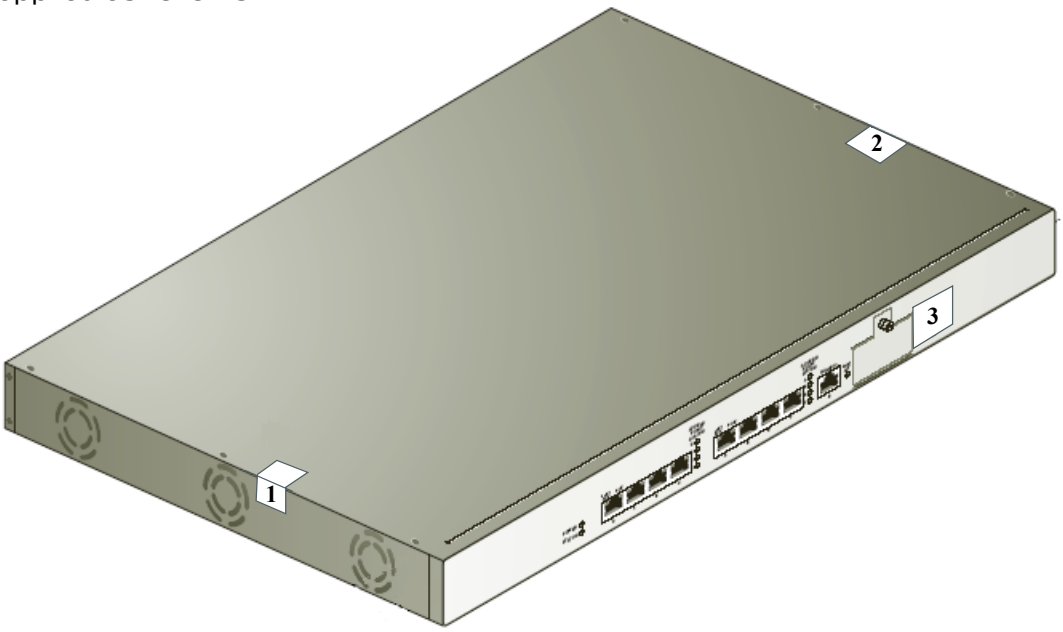

Figure 3-10 Required TELs for the Aruba 800-series Mobility Controller

To Detect Opening the Chassis Cover

1. Spanning the left side and top of the chassis
2. Spanning the right side and top of the chassis

To Detect Access to Restricted Port

3. Spanning the Serial port

Applying TELs

The Crypto Officer should employ TELs as follows:

- Before applying a TEL, make sure the target surfaces are clean and dry.
- Do not cut, trim, punch, or otherwise alter the TEL.
- Apply the wholly intact TEL firmly and completely to the target surfaces.
- Ensure that TEL placement is not defeated by simultaneous removal of multiple modules.
- Allow 24 hours for the TEL adhesive seal to completely cure.
- Record the position and serial number of each applied TEL in a security log.

Once the TELs are applied, the Crypto Officer (CO) should perform initial setup and configuration as described in the next chapter.

Ongoing Management

4

The Aruba 800/5000/6000 Mobility Controller meets FIPS 140-2 Level 2 requirements. The information below describe how to keep the switch in FIPS-approved mode of operation. The Crypto Officer must ensure that the switch is kept in a FIPS-approved mode of operation.

Crypto Officer Management

The Crypto Officer must ensure that the switch is always operating in a FIPS-approved mode of operation. This can be achieved by ensuring the following:

- FIPS mode must be enabled on the switch before Users are permitted to use the switch (see "Enabling FIPS Mode" on page 56)
- Passwords must be at least six characters long.
- VPN services can only be provided by IPSec or L2TP over IPSec.
- Access to the switch Web Interface is permitted only using HTTPS over a TLS tunnel. Basic HTTP and HTTPS over SSL are not permitted.
- Only SNMP read-only may be enabled.
- If cryptographic algorithms can be set for services (such as HTTPS, L2 AES-CBC, SSH, and IKE/IPSec), only FIPS-approved algorithms can be specified, which include AES, DES (for legacy use only), Triple-DES, SHA-1, HMAC SHA-1, and RSA signature and verification.
- TFTP can only be used to load backup and restore files. These files are: Configuration files (system setup configuration), the WMS database (radio network configuration), and log files. (FTP and TFTP over IPSec can be used to transfer configuration files.)
- The switch logs must be monitored. If a strange activity is found, the Crypto Officer should take the switch off line and investigate.
- The Tamper-Evident Labels (TELs) must be regularly examined for signs of tampering.
- Switch software upgrades are not allowed in FIPS mode.

- When installing expansion or replacement modules for the Aruba 5000/6000 , use only FIPS-approved modules (see "Additional Modules for the Aruba 6000" on page 37), replace TELs affected by the change, and record the reason for the change, along with the new TEL locations and serial numbers, in the security log.
- The Crypto Officer shall not configure the Diffie-Hellman algorithm with 768-bits (Group 1) in FIPS mode for IKE/IPSec and SSH.

User Guidance

The User accesses the switch VPN functionality as an IPSec client. The user can also access the switch 802.11i functionality as an 802.11 client. Although outside the boundary of the switch, the User should be directed to be careful not to provide authentication information and session keys to others parties.

Set Up and Configuration 5

The Aruba 800/5000/6000 Mobility Controller meets FIPS 140-2 Level 2 requirements. The sections below describe how to place and keep the switch in FIPS-approved mode of operation. The Crypto Officer (CO) must ensure that the switch is kept in a FIPS-approved mode of operation.

Connecting to the Switch

Step 1 Power up the Aruba 800/5000/6000 Mobility Controller.

1. Connect a management station to a network port on the switch.

   Connect one end of a 4- or 8-conductor Category 5 UTP Ethernet cable to your management PC or laptop FE port. Attach the other end of the cable to one of the FE ports.

Note: For the Aruba 5000/6000 the FE management port on the Supervisor Card cannot be used for initial setup.

2. Initiate an SSH connection to the switch.

   From the management station, connect to the switch's default management IP address, 192.168.100.1. Once the connection is established, the switch will prompt for a User log in:

```
(aruba)
User: _
```

Logging in with the CLI

Once connected to the switch, the CO should log in as an Administrator:

```
(aruba)
User: admin
password: **********

(aruba) >
```

The default Administrator User name is admin. As shown, the administrator will be prompted to enter their password. The default password is fipsadmin. and is masked by asterisks (*) while entered.

When properly logged in, the CLI User prompt (>) will be displayed. The CLI User mode has a very limited command set. To access the full CLI command set, the CO should enter the privileged mode.

Privileged Mode

To access the full CLI command set from the initial CLI User prompt (>), the administrator must enter the privileged mode using the enable command:

```
(aruba) > enable
password: ***********

(aruba) #
```

As shown, the Administrator will be prompted to enter the privileged password. The default password for the privileged mode is fipsenable. The password is masked by asterisks (*) while entered.

Once enabled, the CLI privileged prompt (#) will be displayed. In this mode, the switch can be configured and managed via the CLI.

Note: The CLI supports all administration functions. Other management options (such as the Aruba Web Interface) are also available, but support a subset of the CLI functions.

See the *Aruba ArubaOS 2.4 User's Guide* for complete configuration information.

Enabling FIPS Mode

The switch can operate in two modes: the FIPS-approved mode, and the standard non-FIPS mode. By default, the switch operates in non-FIPS mode.

For FIPS compliance, User cannot be allowed to access the switch until after the CO changes the mode of operation to FIPS mode.

In order to place the switch into the FIPS-approved operating mode, the CO must enter the following commands from the privileged CLI prompt:

```
(aruba) # configure terminal
(aruba) (config) # fips enable
```

Note: All WEP features are disabled when FIPS mode is enabled.

Refer to "Ongoing Management" on page 53 for more information on conditions that have to be met in order to operate an Aruba 800/5000/6000 Mobility Controller in FIPS mode.

FIPS Commands

The following FIPS-related commands are supported in this release of ArubaOS:

- fips enable/disable
- tar
- wipe

fips

A config command (configure terminal) that controls FIPS mode.

To turn on FIPS, enter:

(Aruba) (config)# **fips enable**

To turn off FIPS, enter:

(Aruba) (config)# **fips disable**

tar

A general purpose, enable mode command used to manage file archives. The syntax for the **tar** command is:

```
(Aruba) (config) # tar ?
clean      remove a tar file
crash      tar the crash directory to crash.tar
flash      tar and compress the /flash directory to flash.tar.gz

logs       tar the logs directory to logs.tar
```

The **tar clean** command takes the following options:

```
(Aruba) (config) # tar clean ?
crash      remove crash.tar
flash      remove flash.tar.gz
logs       remove logs.tar
```

wipe

The wipe command is an enable mode command that erases flash.

To delete the entire flash from the Aruba 800/5000/6000 Mobility Controller, enter:

(Aruba) (config) # **wipe**

Use caution when applying this command. A wipe operation cannot be undone.

Logging in with the GUI

Use your Web browser (Internet Explorer 6.0 or higher with SSH enabled) to access the Aruba 800/5000/6000 Mobility Controller using an SSH connection.

1. To start the RF Director software, enter the following URL in your Web browser:

   https://*<Mobility Controller IP address or hostname>*

   The default IP address is 192.168.100.1.

   For example:

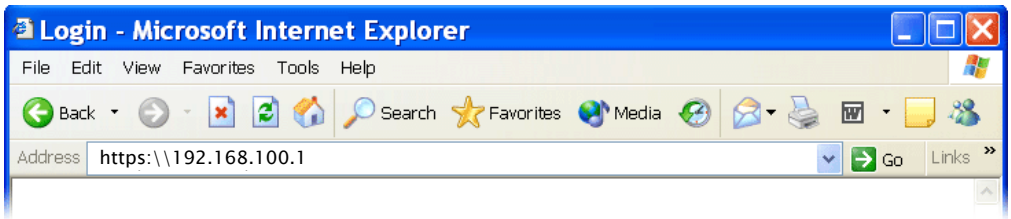

   If your PC has access to the appropriate interface, you will be prompted to login.

2. Log in using the Web User account:

Upon successful login, the RF Director start page will appear. For information on using the GUI, refer to the *Aruba 5000/6000 Mobility Controller User Guide, or Aruba 800-series Mobility Controller User Guide*

Acronyms A

AAA	Accounting, Authentication, Authorization
AES	Advanced Encryption Standard
AM	Air Monitor
ANSI	American National Standards Institute
AP	Access Point
CBC	Cipher Block Chaining
CLI	Command Line Interface
CMVP	Cryptographic Module Validation Program
CO	Crypto Officer
CSE	Communications Security Establishment
CSP	Critical Security Parameter
EDC	Error Detection Code
EMC	Electromagnetic Compatibility
EMI	Electromagnetic Interference
FCC	Federal Communication Commission
FE	Fast Ethernet
FIPS	Federal Information Processing Standard
FTP	File Transfer Protocol
GE	Gigabit Ethernet
GUI	Graphic User Interface
HMAC	Hashed Message Authentication Code
HTTP	Hyper Text Transfer Protocol
HTTPS	Hyper Text Transfer Protocol Secure
Hz	Hertz
IKE	Internet Key Exchange
IPSec	Internet Protocol Security
KAT	Known Answer Test
KEK	Key Encryption Key

L2	Layer 2
L2TP	Layer-2 Tunneling Protocol
LAN	Local Area Network
LED	Light Emitting Diode
LC	Line Card
MAC	Message Authentication Code
MD5	Message Digest 5
NIST	National Institute of Standards and Technology
NVLAP	National Voluntary Laboratory Accreditation Program
OS	Operating System
PCMCIA	Personal Computer Memory Card International Association
PKCS	Public-Key Cryptography Standards/Public Key Cryptographic System
PRNG	Pseudo Random Number Generator
PS	Power Supply
QoS	Quality of Service
RAM	Random Access Memory
RC4	Ron's Code 4 (Ron being Ron Rivest of RSA)
RJ	Registered Jack
RSA	Rivest Shamir and Adleman
SC	Supervisor Card
SHA	Secure Hash Algorithm
SNMP	Simple Network Management Protocol
SP	Security Parameters
SPOE	Serial & Power Over Ethernet
SSH	Secure Shell
SSL	Secure Sockets Layer
TEL	Tamper-Evident Label
TFTP	Trivial File Transfer Protocol
TLS	Transport Layer Security
UTP	Unshielded Twisted Pair
VPN	Virtual Private Network
WLAN	Wireless Local Area Network